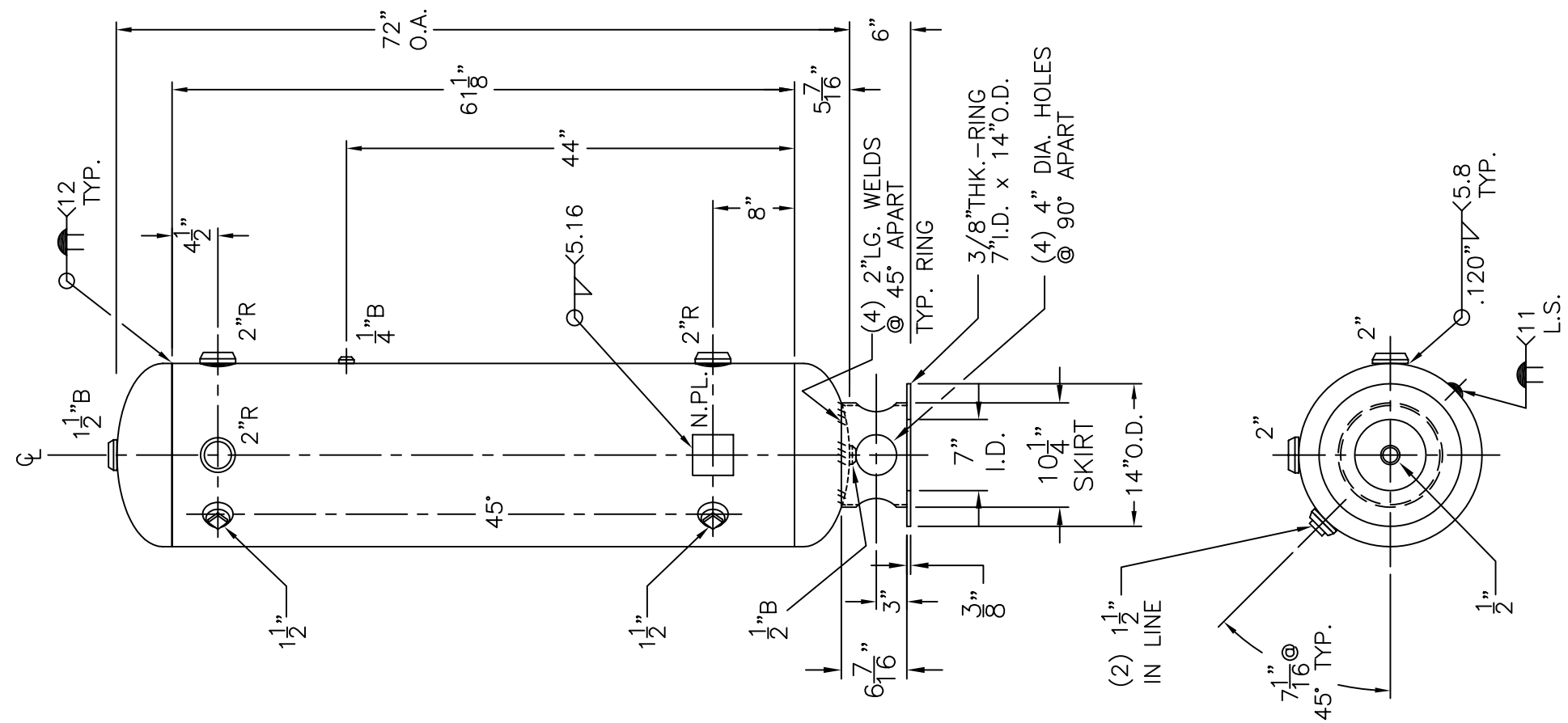

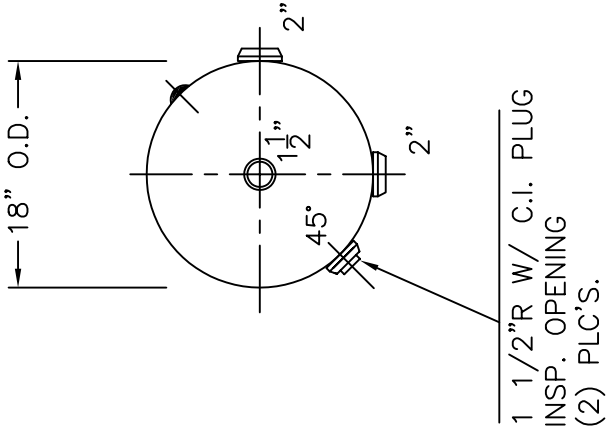

NOTE: 1) HYDRO @ 390 PSIG. MIN.

SHELL / HEADS	.156" SA-414-G 2:1 S.E.	
	JOGGLE	
	.179" SA-414-G	
M.A.W.P.	300 PSIG. @ 400 °F	
M.D.M.T.	-20 °F @ 300 PSIG.	
ASME. SECTION VIII	DIV. 1, 2001 ADD 2002	
X-RAY:	RT-NO	
GALLONS:	73	WT. 247 LBS.
SERIAL NO.		
N.B.		

18-VD-73-F	REV. 8-15-03
	DATE: 11-28-86
FOR: HANSON STANDARD	
VERT. AIR TANK	
INSIDE: UNPAINTED	
OUTSIDE: PRIME	
BY: J.G.	SCALE: 3/4"=12"

ROY E. HANSON JR. MFG.

1924 COMPTON AVE.
LOS ANGELES, CA 90011