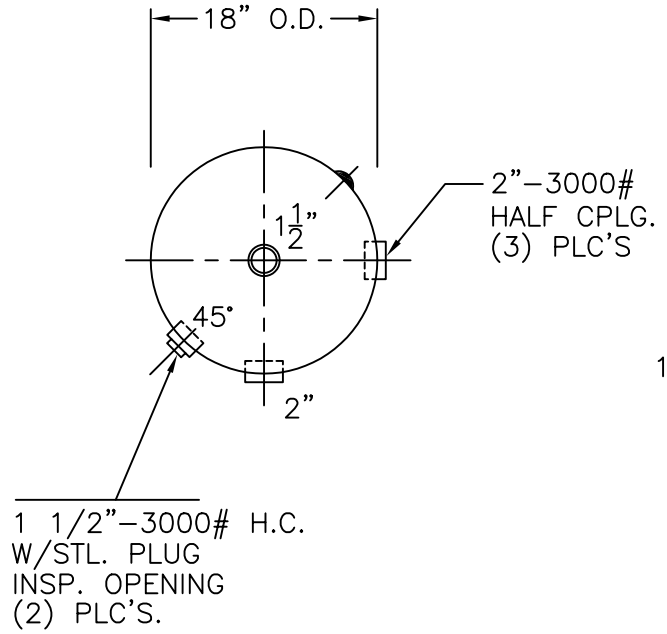

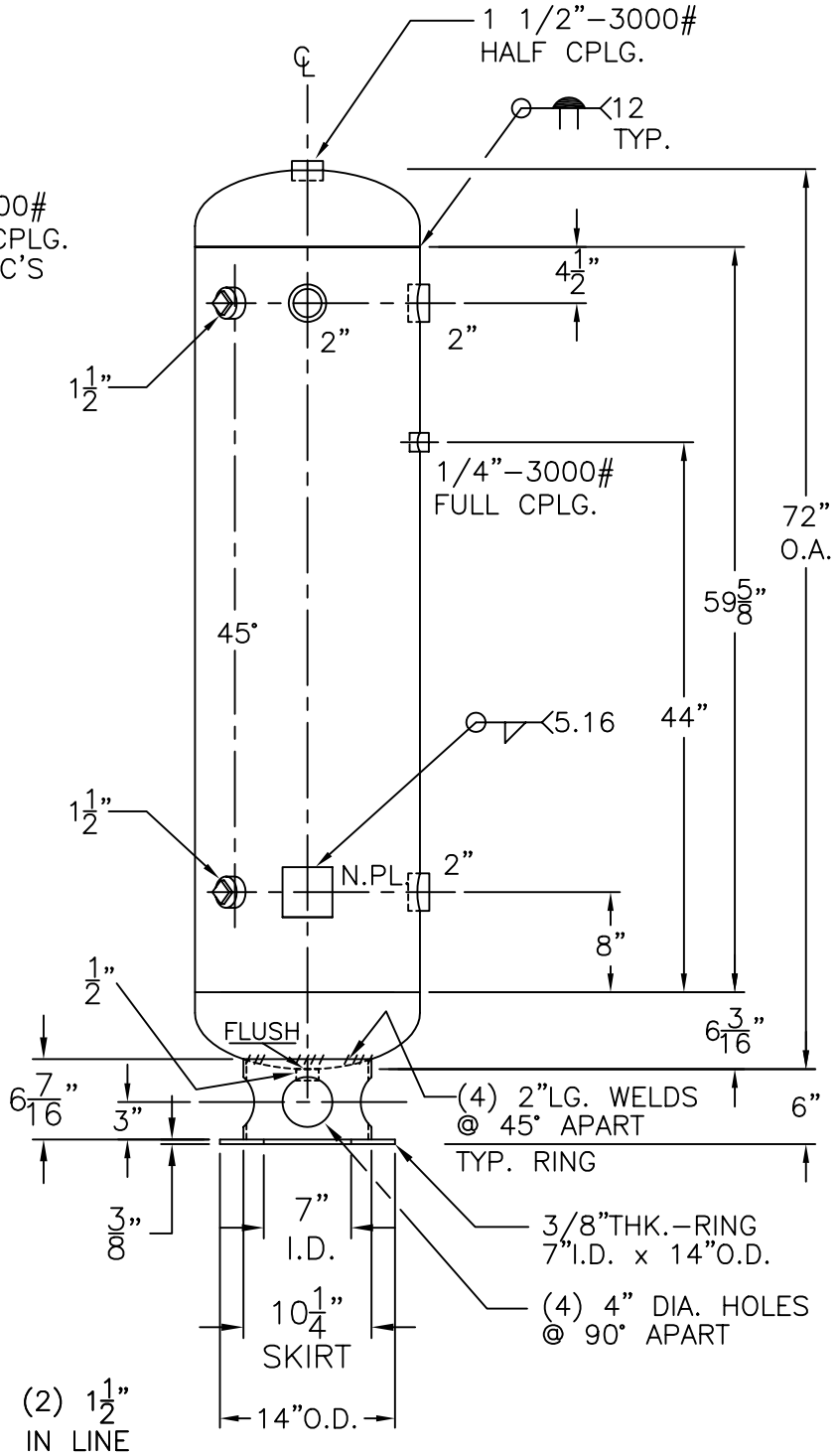

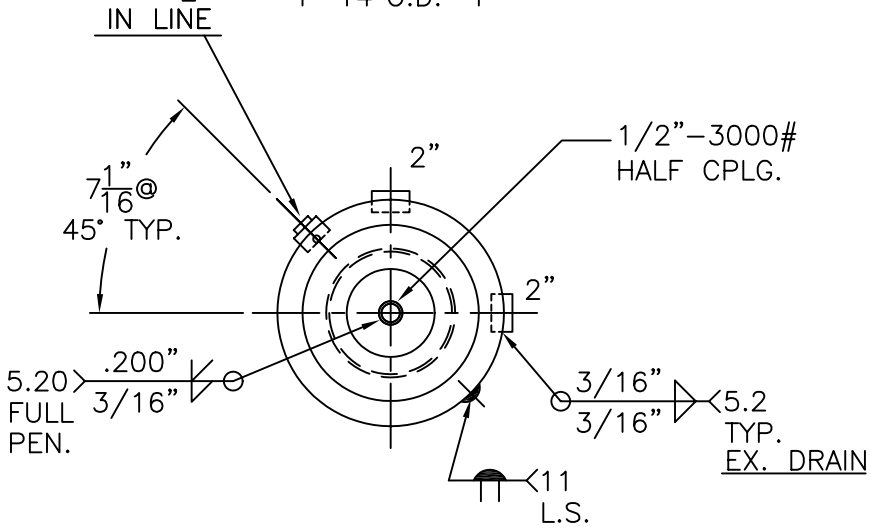

NOTE: 1) HYDRO @ 520 PSIG. MIN.

SHELL / HEADS	.200" SA-414-G 2:1 S.E.
	(.195" MIN.) JOGGLE
	.245" SA-455
M.A.W.P.	400 PSIG. @ 400 °F
M.D.M.T.	-20 °F @ 400 PSIG.
ASME. SECTION VIII	DIV. 1, 2001 ADD 2002
X-RAY:	RT-NO
GALLONS: 73	WT. 318 LBS.
SERIAL NO.	
N.B.	

18-VJ-73-F	REV. 8-26-03
FOR: HANSON STANDARD	DATE: 12-23-84
VERT. AIR TANK	
INSIDE: UNPAINTED	
OUTSIDE: PRIME	
BY: J.G.	SCALE: 3/4"=12"

ROY E. HANSON JR. MFG.
1924 COMPTON AVE.
LOS ANGELES, CA 90011