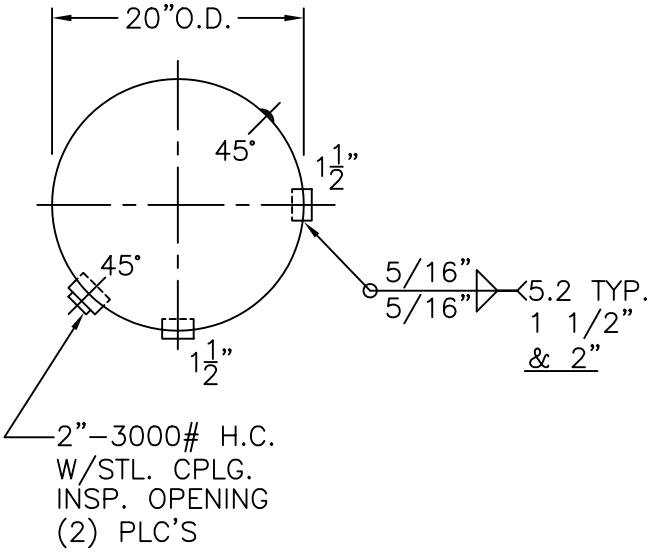

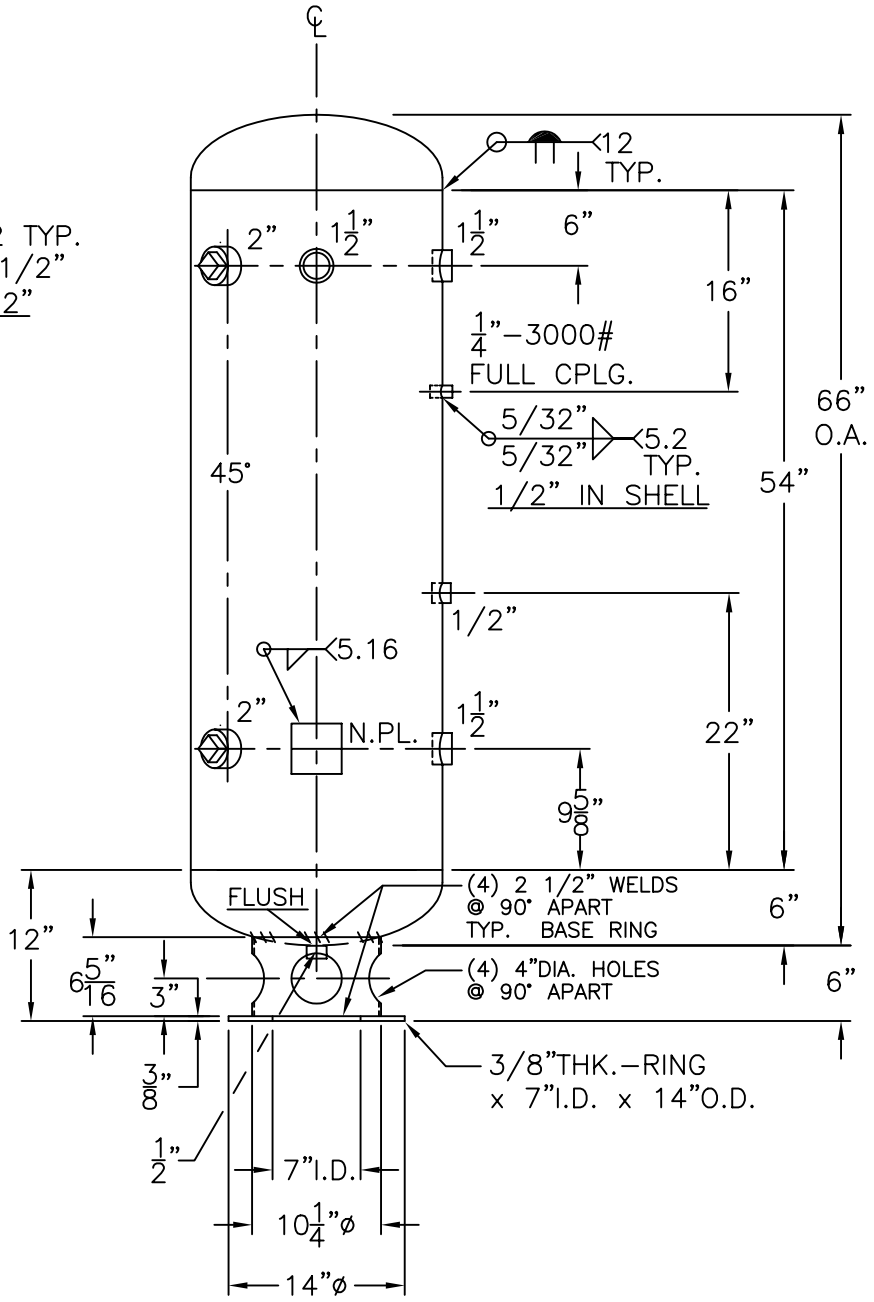

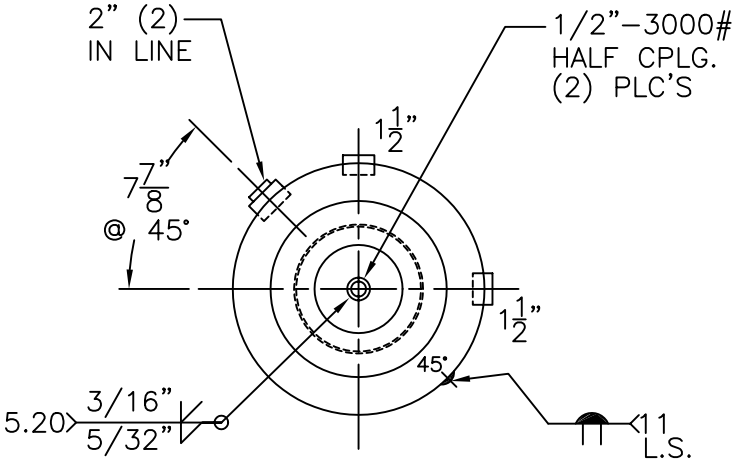

NOTE: 1) HYDRO @ 715 PSIG. MIN.

TRIM	.3125" SA-455 2:1 S.E.
SHELL / HEADS	.299" MIN. SA-455
M.A.W.P.	550 PSIG. @ 400 °F
M.D.M.T.	-20 °F @ 550 PSIG.
ASME. SECTION VIII DIV. 1, 2001 ADD 2002	
X-RAY:	RT-4 L.S. ONLY
GALLONS: 80	WT. 409 LBS.
SERIAL NO.	
N.B.	

20-VK-80-F	REV.
FOR: HANSON STANDARD	DATE: 9-5-03
VERT. AIR TANK	
INSIDE: UNPAINTED	
OUTSIDE: PRIME	
BY: J.G.	SCALE: 3/4"=12"

ROY E. HANSON JR. MFG.
1924 COMPTON AVE.
LOS ANGELES, CA 90011