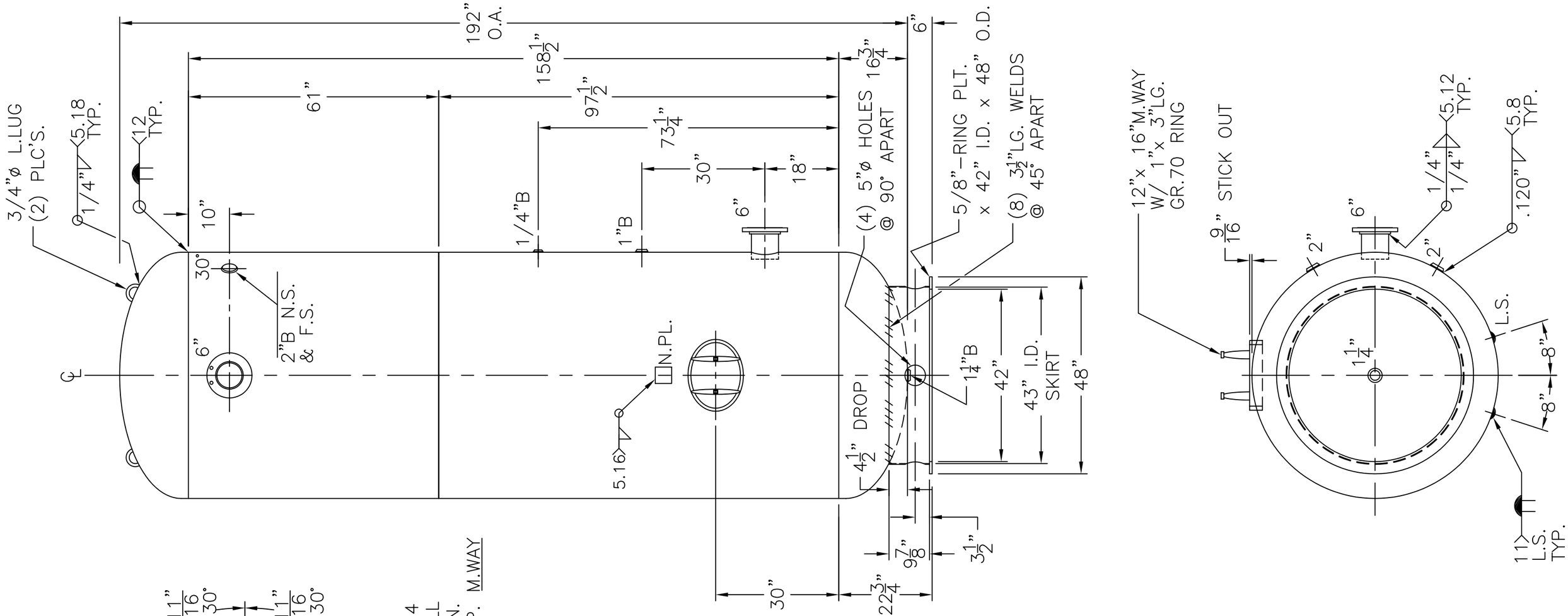

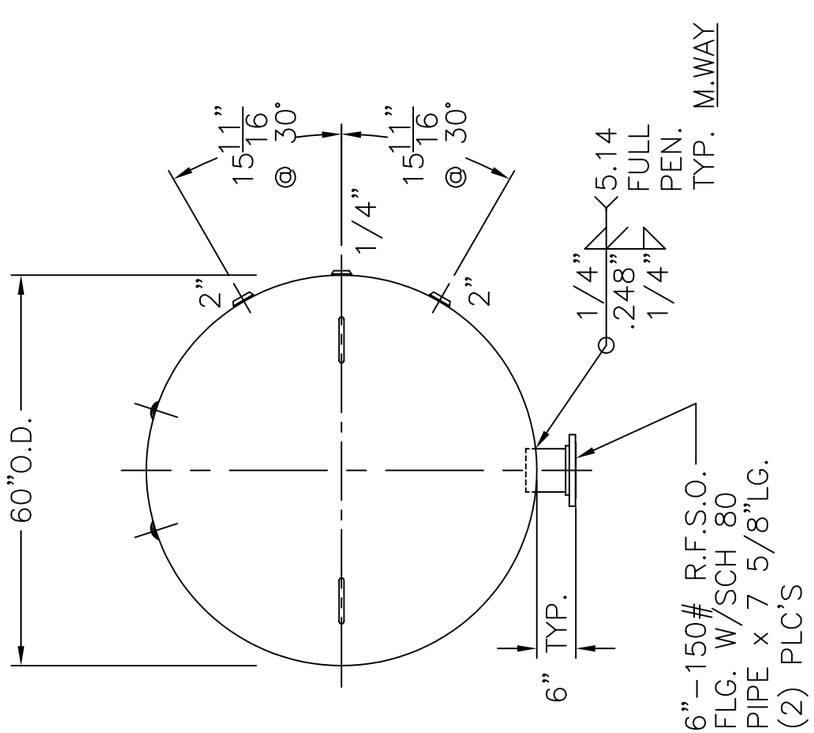

NOTE: 1) HYDRO @ 195 PSIG. MIN.

SHELL / HEADS	.288" SA-455 2:1 S.E.	60-VP-2180-F
	(.246" MIN.)	REV. 12-10-02
		DATE: 10-14-99
		FOR: HANSON STANDARD
		VERT. AIR TANK
	.248" SA-455	
		INSIDE: UNPAINTED
M.A.W.P. 150 PSIG. @ 400 °F		
M.D.M.T. -20 °F @ 150 PSIG.		OUTSIDE: PRIME
ASME. SECTION VIII DIV. 1, 2001 ADD 2002		CAD-"B" UNDER "STD"-SERIES
X-RAY: RT-4 SPOT L.S.		BY: E.S. SCALE:1/2"=12"
GALLONS: 2180	WT. 3188 LBS.	ROY E. HANSON JR. MFG.
SERIAL NO.		1924 COMPTON AVE.
N.B.		LOS ANGELES, CA 90011