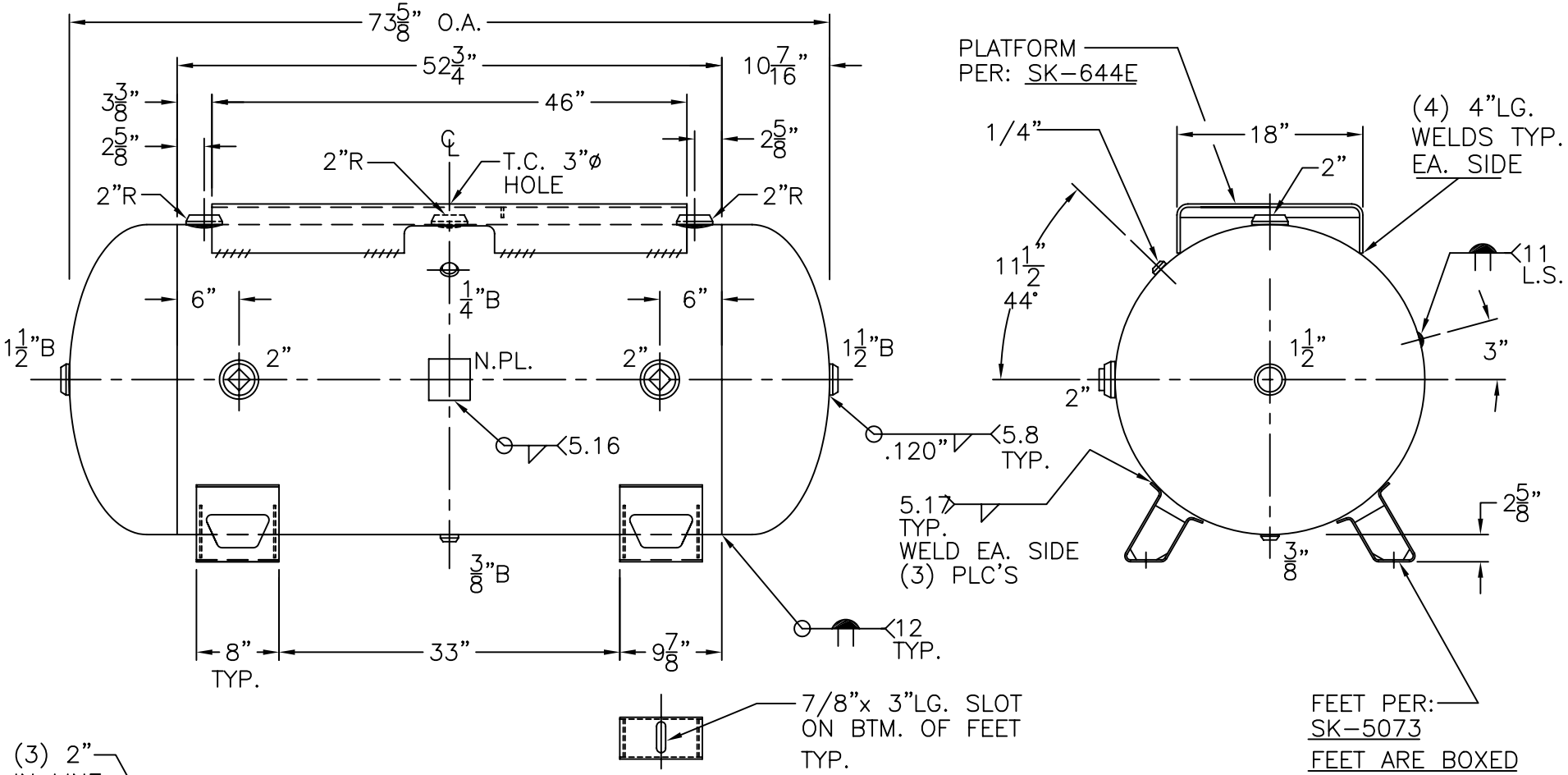

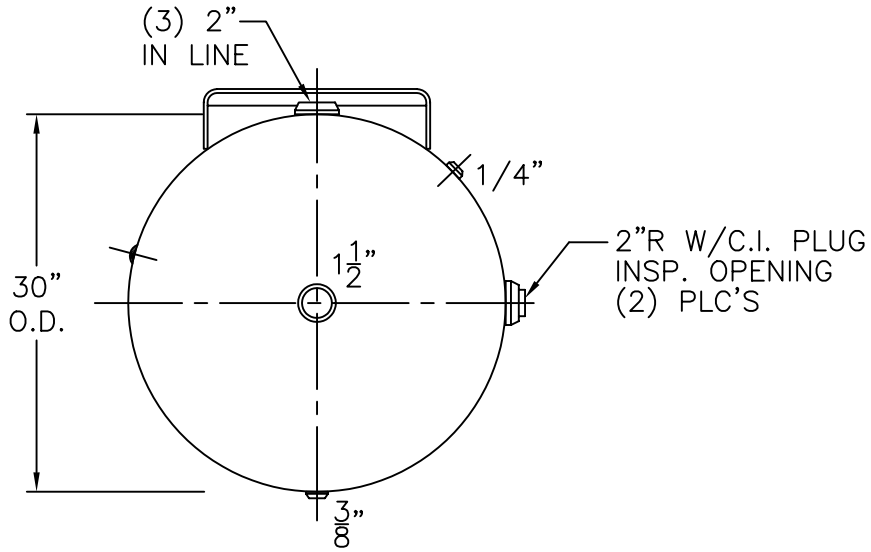

VIEW W/OUT SUPT.

NOTE: 1) HYDRO @ 260 PSIG. MIN.

SHELL / HEADS	.166" SA-414-G 2.1 S.E.	H-200-BP	REV. 2-5-04
	(.164" MIN.) JOGGLE		DATE: 6-25-80
	BROWN STRIPE	FOR: HANSON STANDARD	
		HORIZ. AIR TANK	
	.218" SA-455		
		INSIDE: UNPAINTED	
M.A.W.P. 200 PSIG. @ 400 °F			
M.D.M.T. -20 °F @ 200 PSIG.		OUTSIDE: PRIME	
ASME. SECTION VIII DIV. 1, 2001 ADD 2003			
X-RAY: RT-NO		BY: E.S	SCALE: 3/4"=12"
GALLONS: 200	WT. 587 LBS.	ROY E. HANSON JR. MFG.	
SERIAL NO.		1924 COMPTON AVE. LOS ANGELES, CA 90011	
N.B.			