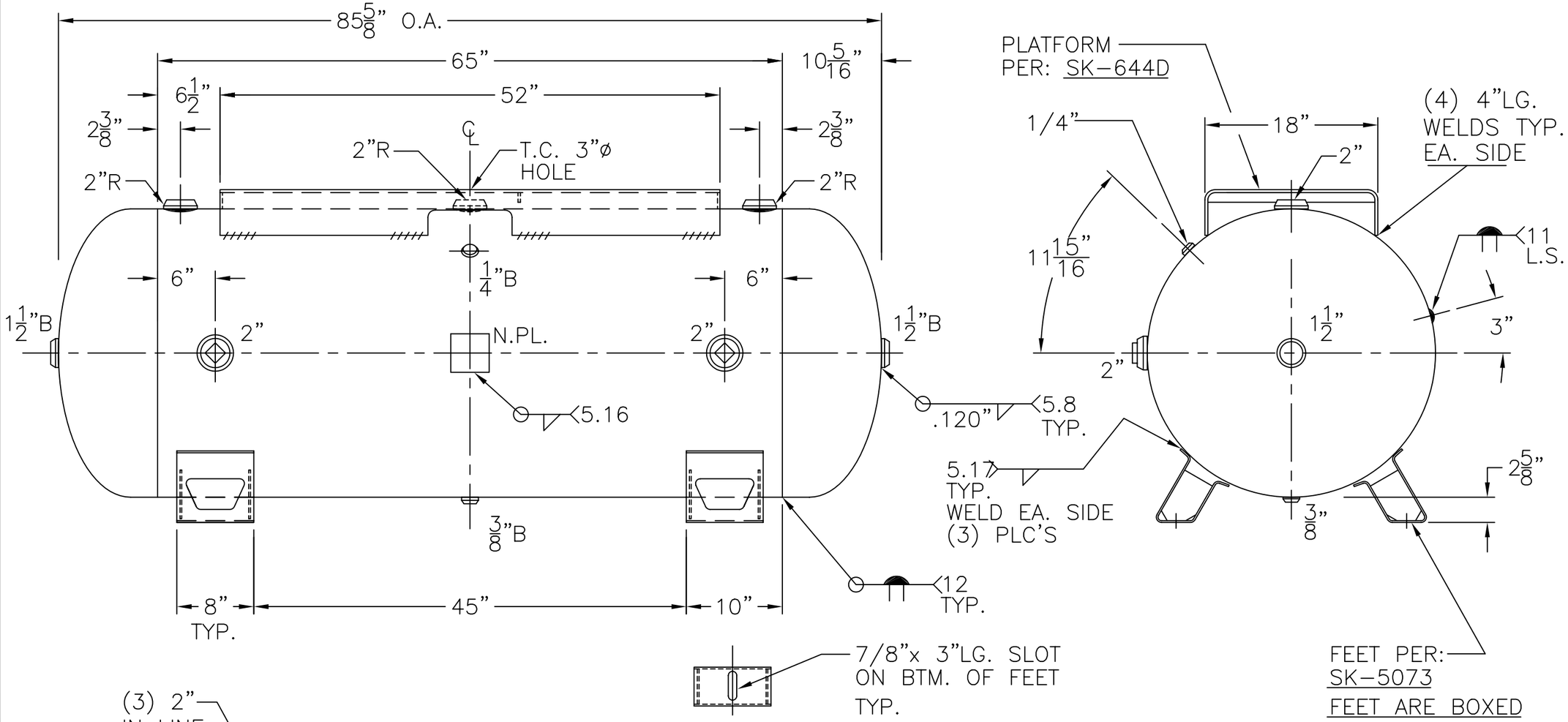

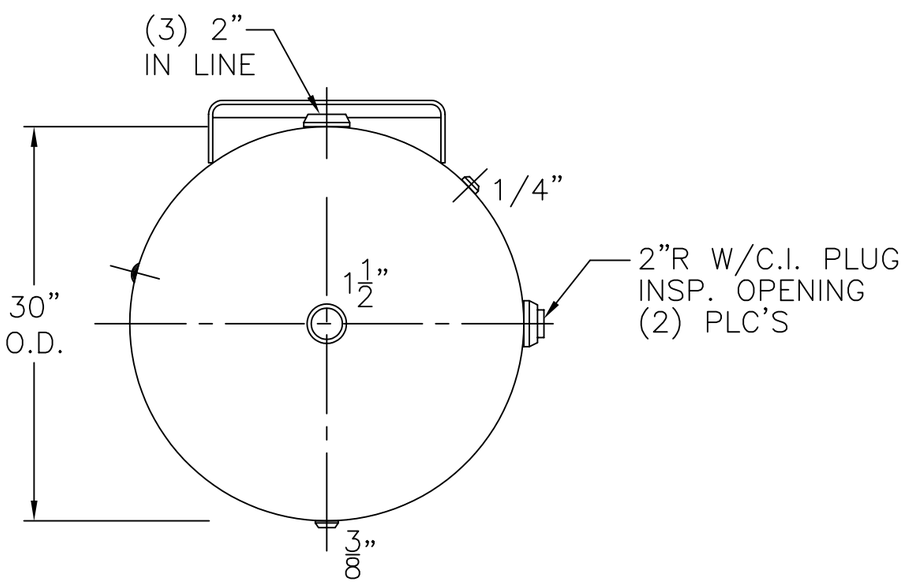

VIEW W/OUT SUPT.

NOTE: 1) HYDRO @ 325 PSIG. MIN.

SHELL / HEADS	.218" SA-455 2.1 S.E.	
	JOGGLE	
	.250" SA-455	
M.A.W.P.	250 PSIG. @ 400 °F	
M.D.M.T.	-20 °F @ 250 PSIG.	
ASME. SECTION VIII	DIV. 1, 2001 ADD 2002	
X-RAY:	RT-NO	
GALLONS:	240	WT. 747 LBS.
SERIAL NO.		
N.B.		

HC-240-BP	REV. 6-25-03
	DATE: 4-11-84
FOR: HANSON STANDARD	
HORIZ. AIR TANK	
INSIDE: UNPAINTED	
OUTSIDE: PRIME	
BY: J.G.	SCALE: 3/4"=12"

ROY E. HANSON JR. MFG.
1924 COMPTON AVE.
LOS ANGELES, CA 90011