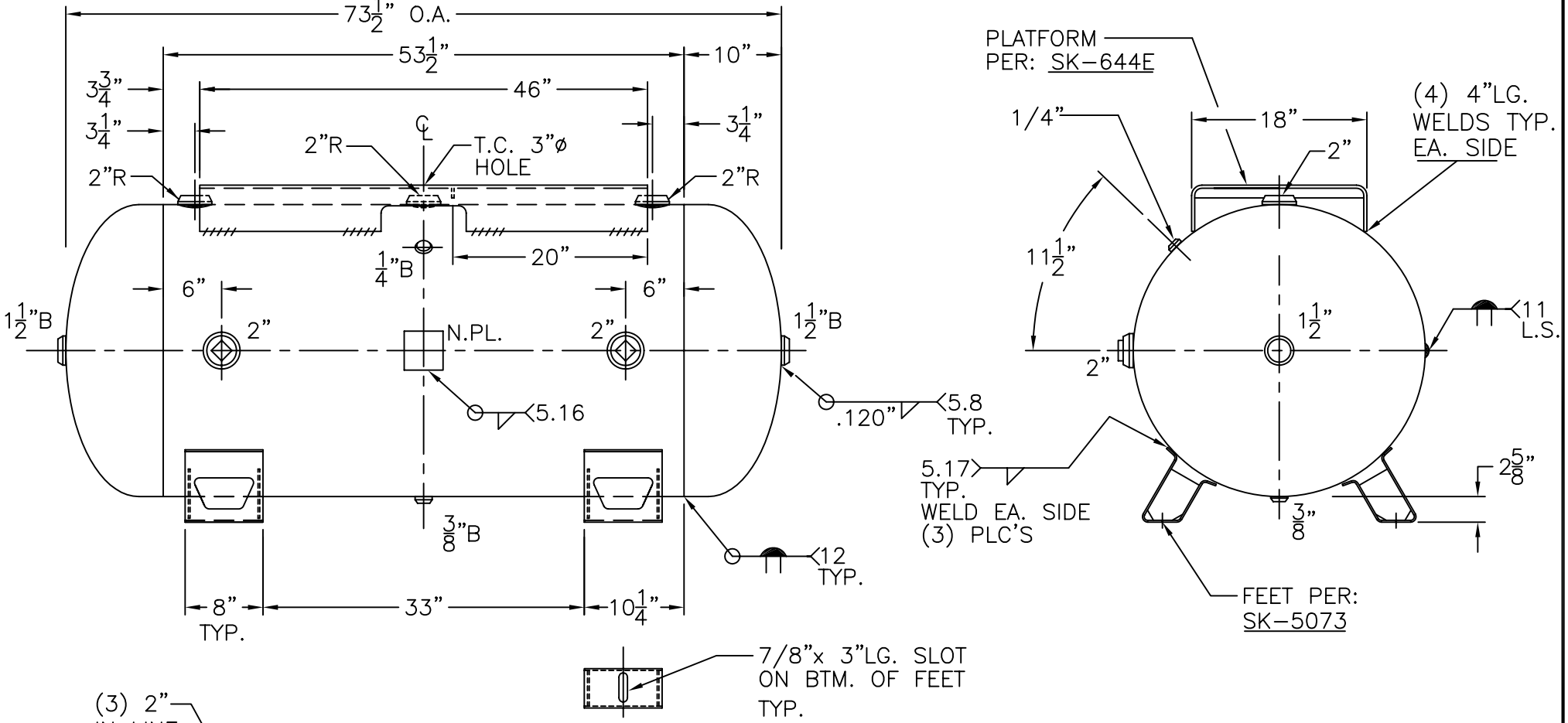

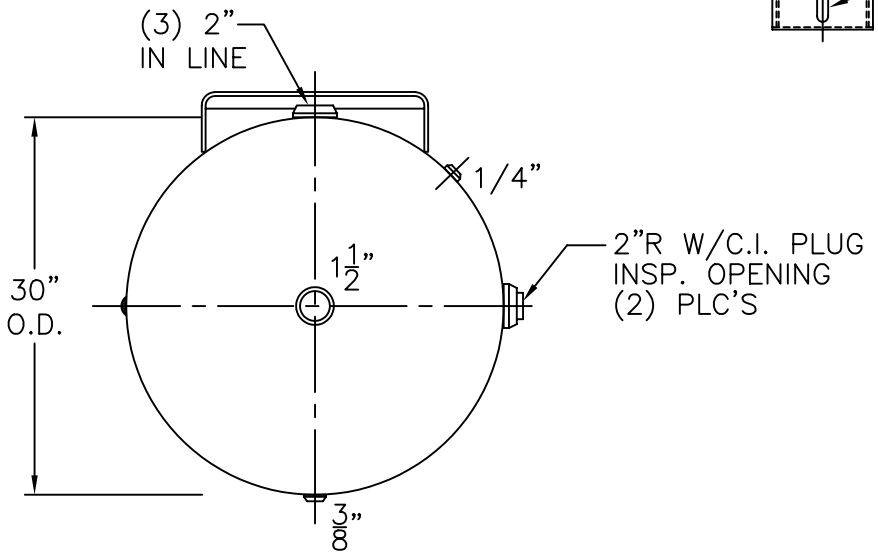

VIEW W/OUT SUPT.

NOTE: 1) HYDRO @ 390 PSIG. MIN.
2) FOR C.R.N. SEE OLD PRINT DATED 9-10-80.

SHELL / HEADS	.250" SA-455 2.1 S.E.	
	(.244" MIN.) JOGGLE	
	.250" SA-455	
M.A.W.P. 300 PSIG. @ 400 °F		
M.D.M.T. -20 °F @ 300 PSIG.		
ASME. SECTION VIII DIV. 1, 2001 ADD 2002		
X-RAY: RT-4 SPOT L.S. ONLY		
GALLONS: 200	WT. 685 LBS.	
SERIAL NO.		
N.B.		

HD-200-BP	REV. 7-21-03
	DATE: 12-18-86
FOR: HANSON STANDARD	
HORIZ. AIR TANK	
INSIDE: UNPAINTED	
OUTSIDE: PRIME	
BY: E.S.	SCALE: 3/4"=12"

ROY E. HANSON JR. MFG.
1924 COMPTON AVE.
LOS ANGELES, CA 90011