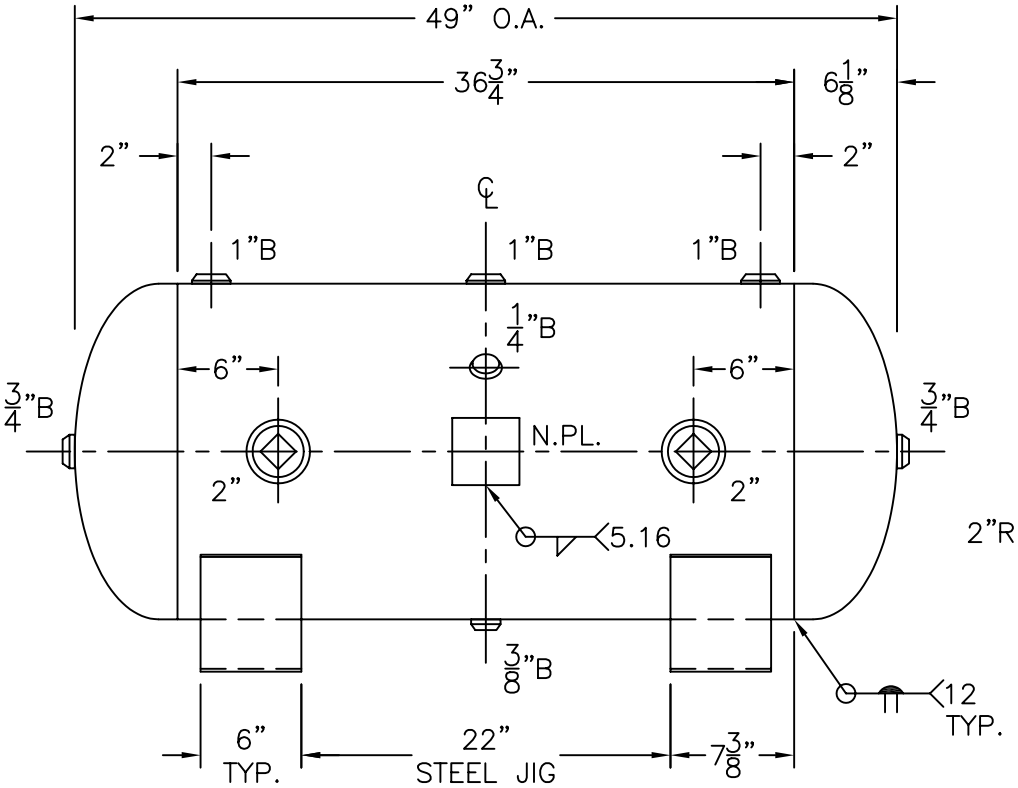

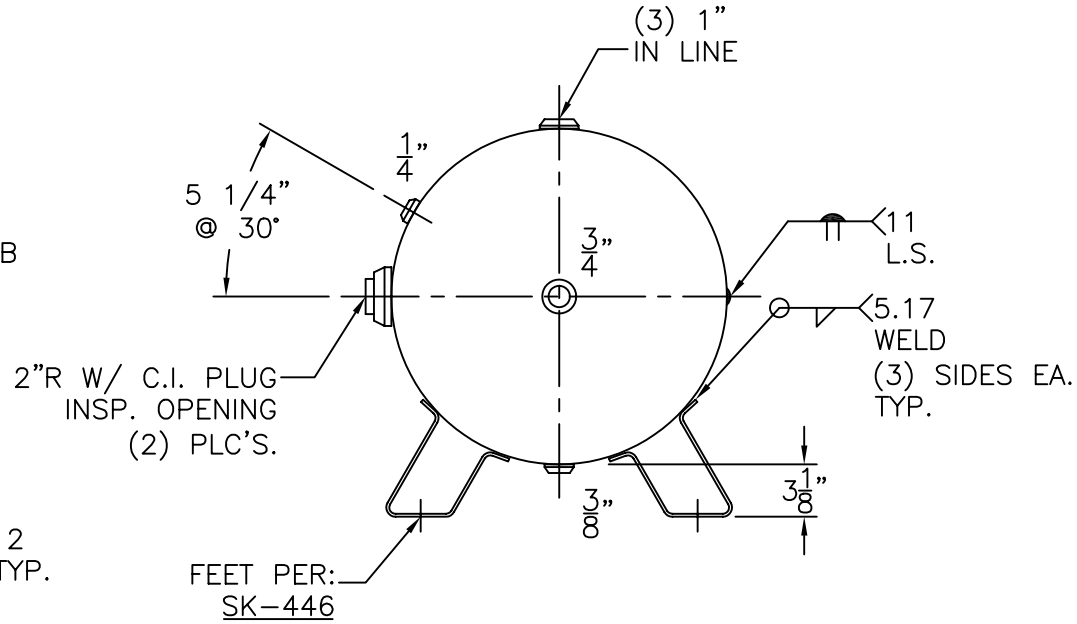

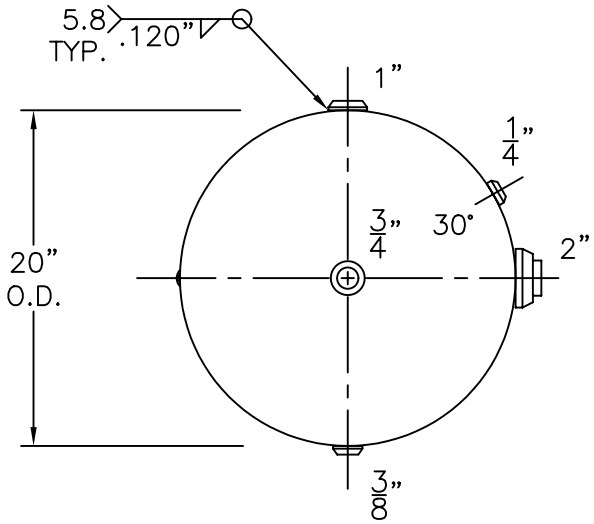

VIEW W/OUT SUPPORTS

NOTE: 1) HYDRO @ 390 PSIG. MIN.

SHELL / HEADS	.164" MIN. SA-414-G 2:1 S.E.	HD-60-F — REV. 4-26-04 — DATE: 5-22-87
	JOGGLE	FOR: HANSON STANDARD
		HORIZ. AIR TANK
	.165 SA-414-G	
		INSIDE: UNPAINTED
M.A.W.P. 300 PSIG. @ 400 °F		
M.D.M.T. −20 °F @ 300 PSIG.		OUTSIDE: PRIME
ASME. SECTION VIII DIV. 1, 2001 ADD. 2003		
X-RAY: RT-4 SPOT L.S. ONLY		BY: J.G. — SCALE: 1"=12"
GALLONS: 60	WT. 193 LBS.	ROY E. HANSON JR. MFG.
SERIAL NO.		1924 COMPTON AVE.
N.B.		LOS ANGELES, CA 90011