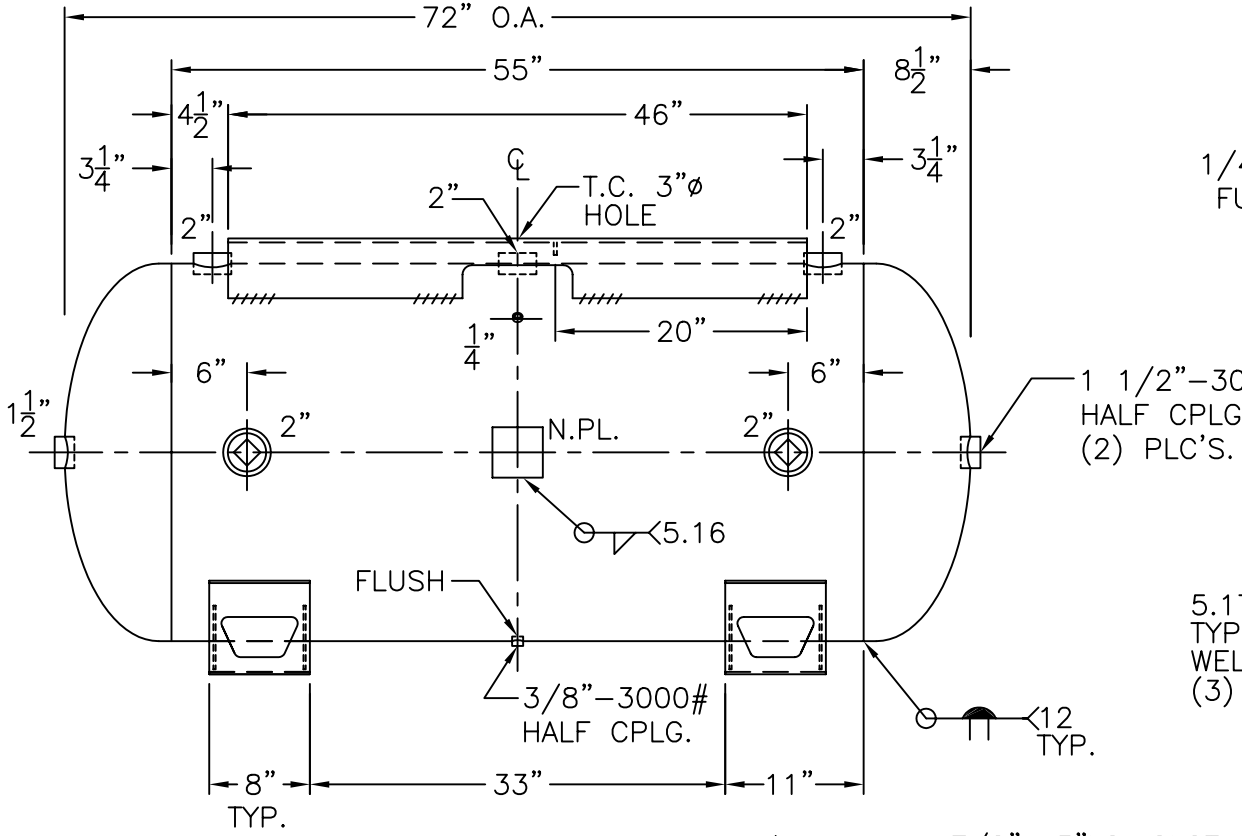

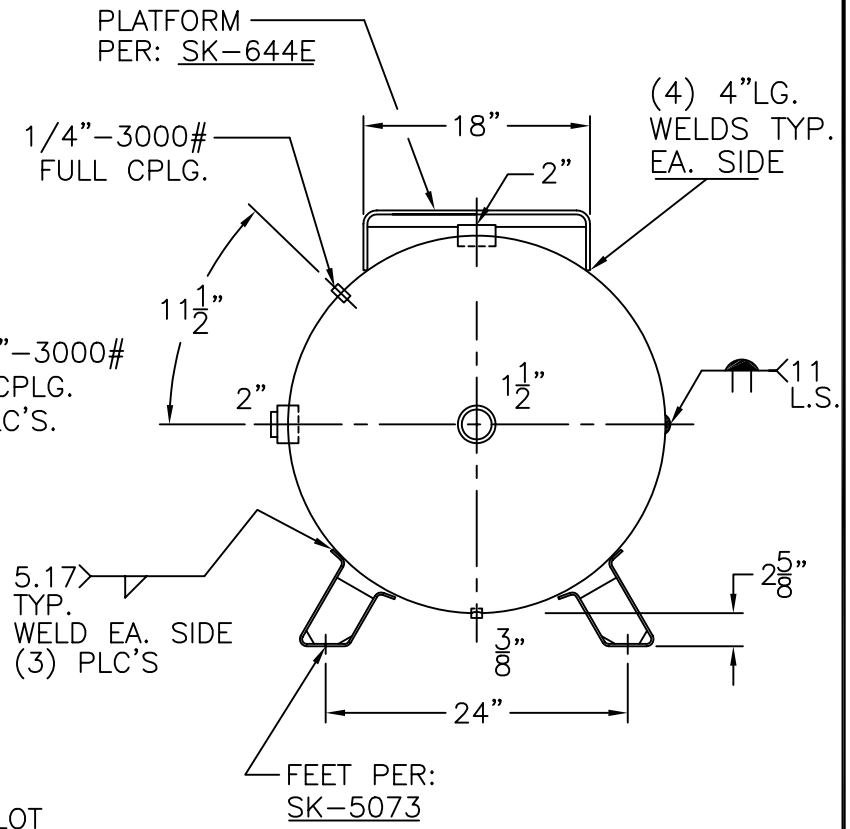

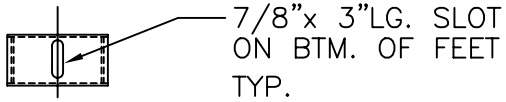

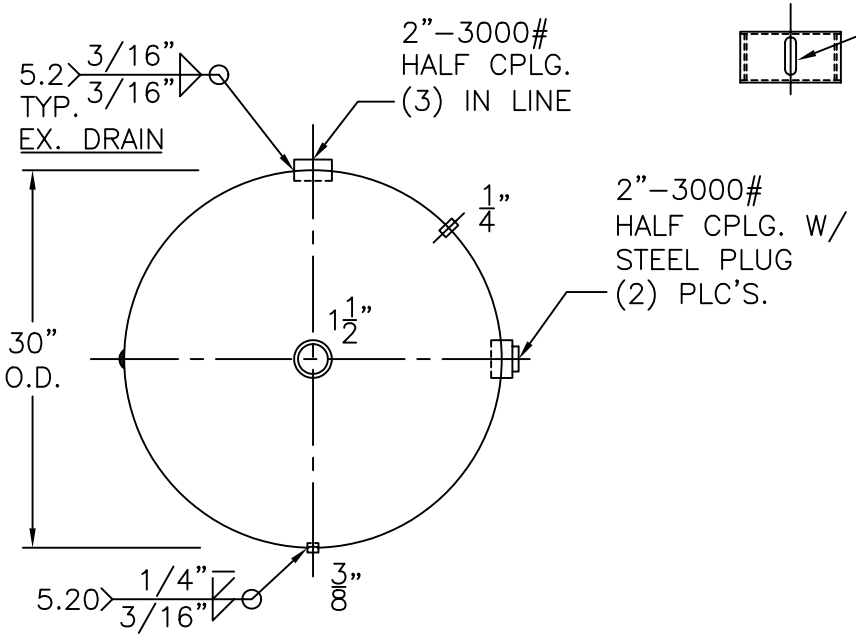

VIEW W/O FEET & PLATFORM

NOTE: 1) HYDRO @ 520 PSIG. MIN.

SHELL / HEADS	SA–455 2.1 S.E.	HJ–200–BP
	(.324" MIN.)	REV. 7–21–03
		DATE: 10–9–89
		FOR: HANSON STANDARD
		HORIZ. AIR TANK
	.337" SA–455	
		INSIDE: UNPAINTED
M.A.W.P. 400 PSIG. @ 400 °F		
M.D.M.T. –20 °F @ 400 PSIG.		OUTSIDE: PRIME
ASME. SECTION VIII DIV. 1, 2001 ADD 2002		
X–RAY: RT–4 SPOT L.S. ONLY		BY: E.S. SCALE: 3/4"=12"
GALLONS: 200	WT. 874 LBS.	ROY E. HANSON JR. MFG.
SERIAL NO.		1924 COMPTON AVE.
N.B.		LOS ANGELES, CA 90011