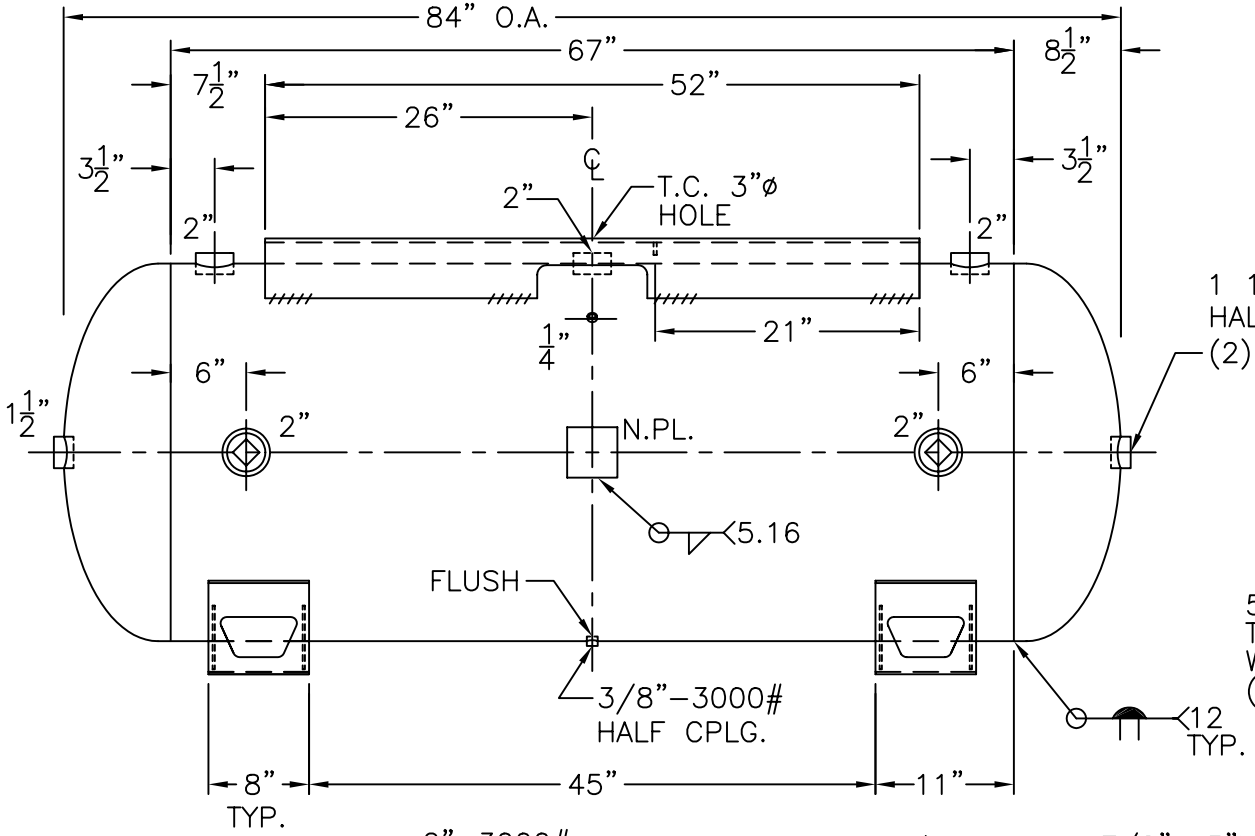

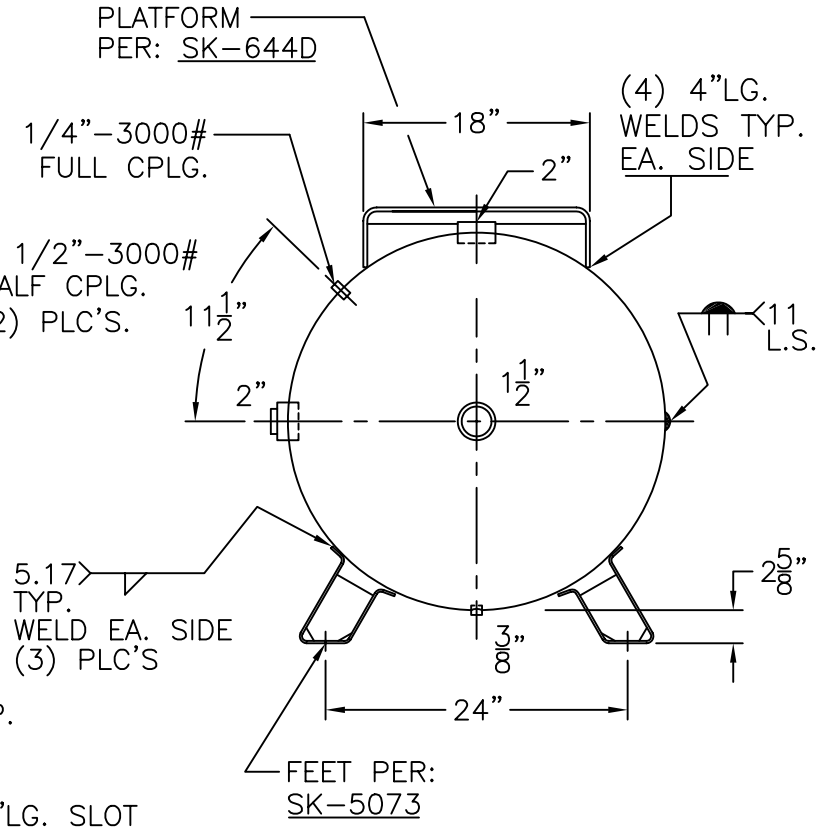

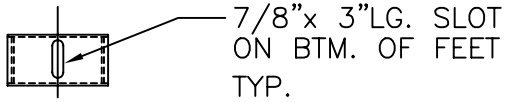

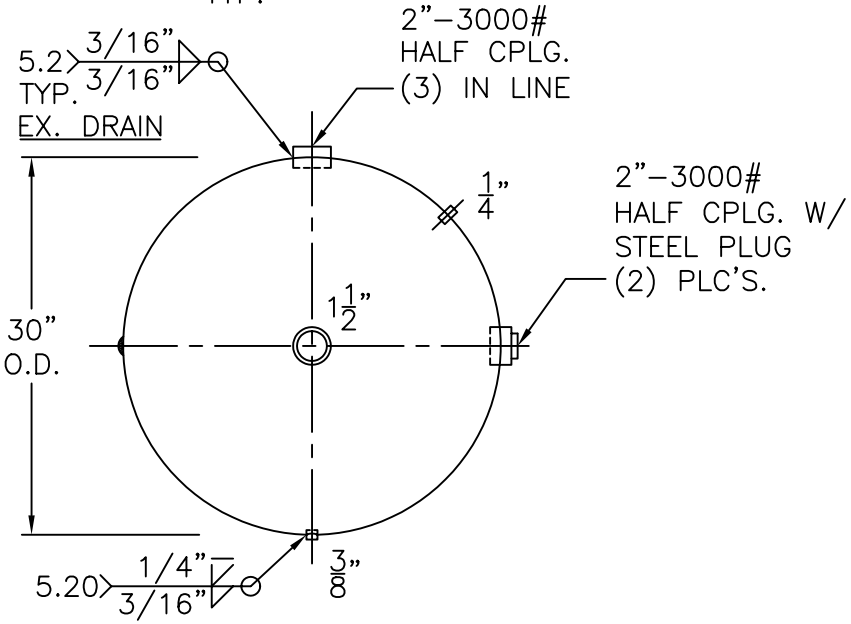

VIEW W/O FEET & PLATFORM

NOTE: 1) HYDRO @ 520 PSIG. MIN.

SHELL / HEADS	SA-455 2.1 S.E.	
	(.324" MIN.)	
	.337" SA-455	
M.A.W.P. 400 PSIG. @ 400 °F		
M.D.M.T. -20 °F @ 400 PSIG.		
ASME. SECTION VIII DIV. 1, 2001 ADD 2002		
X-RAY: RT-4 SPOT L.S. ONLY		
GALLONS: 240	WT. 1003 LBS.	
SERIAL NO.		
N.B.		

HJ-240-BP	REV. 7-22-03
	DATE: 6-12-87
FOR: HANSON STANDARD HORIZ. AIR TANK	
INSIDE: UNPAINTED	
OUTSIDE: PRIME	
BY: E.S.	SCALE: 3/4"=12"

ROY E. HANSON JR. MFG.
1924 COMPTON AVE.
LOS ANGELES, CA 90011