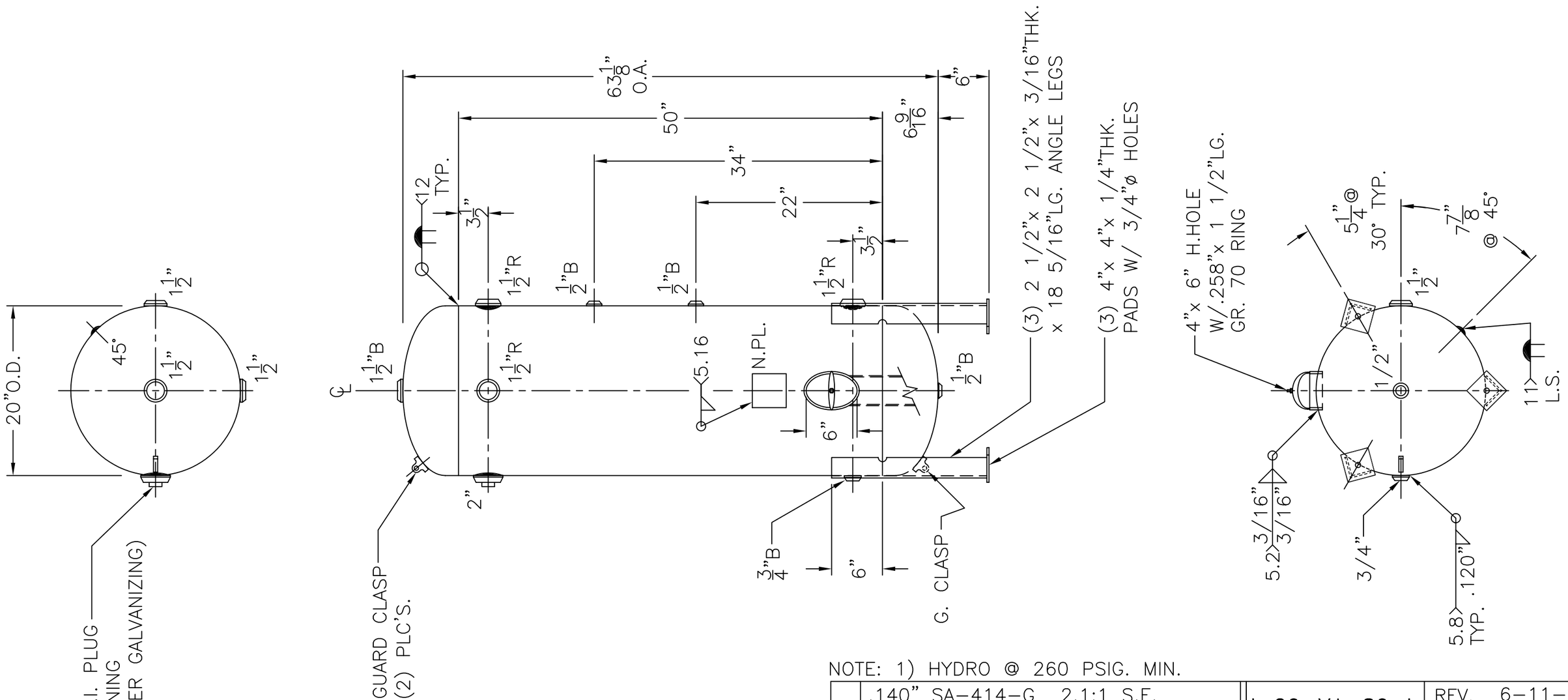

NOTE: 1) HYDRO @ 260 PSIG. MIN.

SHELL / HEADS	.140" SA-414-G 2.1:1 S.E.	I-20-VA-80-L	REV. 6-11-03
	JOGGLE		DATE: 11-23-88
		FOR: HANSON STANDARD	
		VERT. AIR TANK	
	.165" SA-414-G		
		INSIDE: GALVANIZED	
M.A.W.P. 200 PSIG. @ 300 °F		OUTSIDE: GALVANIZED	
M.D.M.T. -20 °F @ 200 PSIG.		CAD "B" SIZE UNDER "STD"-SERIES	
ASME. SECTION VIII DIV. 1, 2001 ADD 2002		LEG-ZONE 4-N.A.	
X-RAY: RT-NO		BY: J.G.	SCALE: 1"=12"
GALLONS: 80	WT. 236 LBS.	ROY E. HANSON JR. MFG.	
SERIAL NO.		1924 COMPTON AVE.	
N.B.		LOS ANGELES, CA 90011	