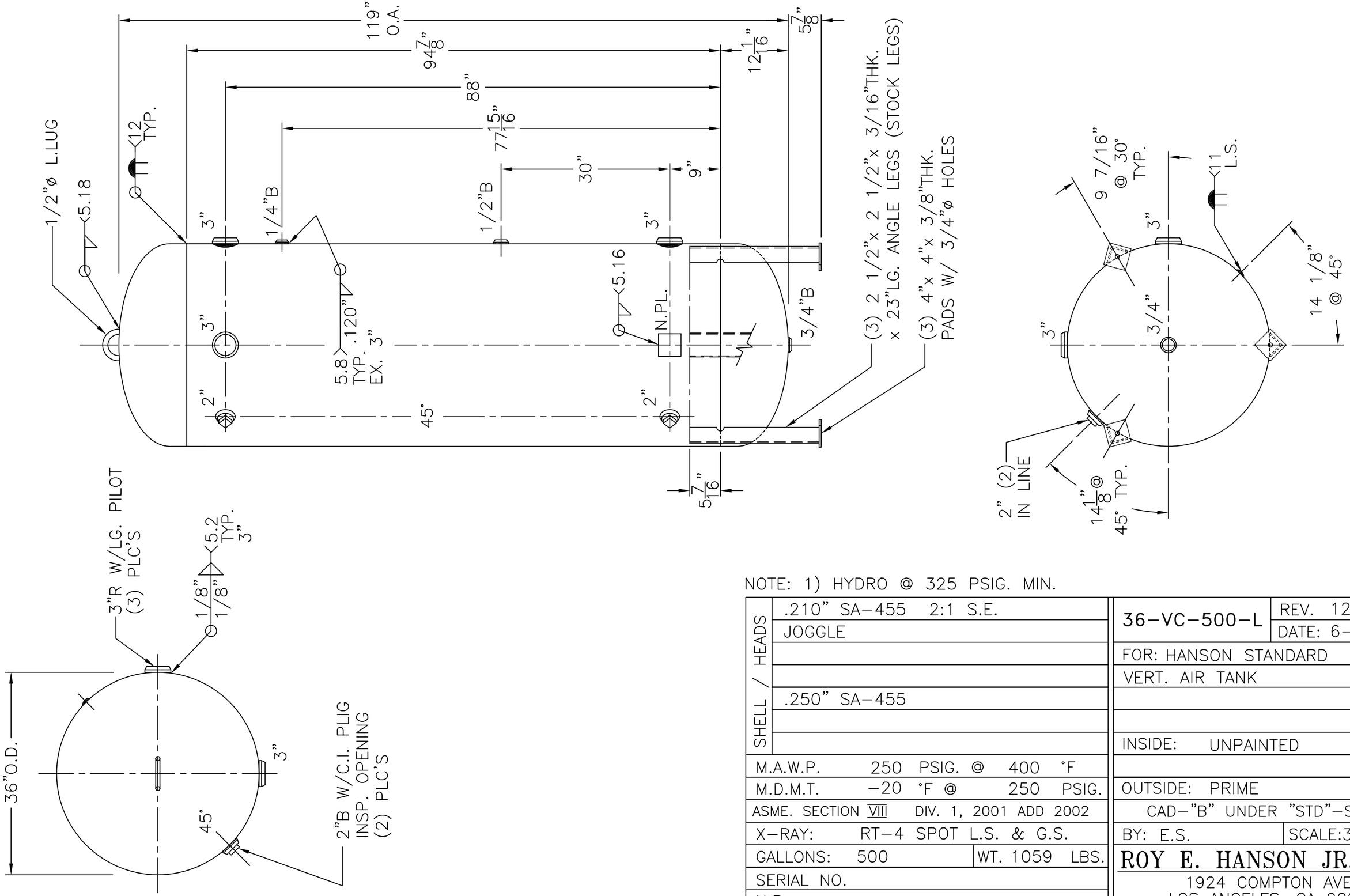

NOTE: 1) HYDRO @ 325 PSIG. MIN.

HEADS	.210" SA-455 2:1 S.E.	36-VC-500-L — REV. 12-4-02
	JOGGLE	DATE: 6-25-81
		FOR: HANSON STANDARD
		VERT. AIR TANK
SHELL	.250" SA-455	
		INSIDE: UNPAINTED
M.A.W.P.	250 PSIG. @ 400 °F	
M.D.M.T.	-20 °F @ 250 PSIG.	OUTSIDE: PRIME L-4-02
ASME. SECTION VIII	DIV. 1, 2001 ADD 2002	CAD-"B" UNDER "STD"-SERIES
X-RAY:	RT-4 SPOT L.S. & G.S.	BY: E.S. SCALE:3/4"=12"
GALLONS: 500	WT. 1059 LBS.	ROY E. HANSON JR. MFG.
SERIAL NO.		1924 COMPTON AVE.
N.B.		LOS ANGELES, CA 90011