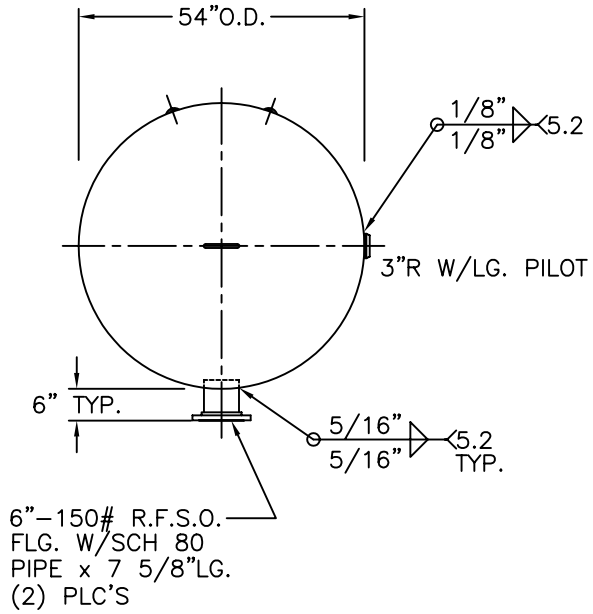

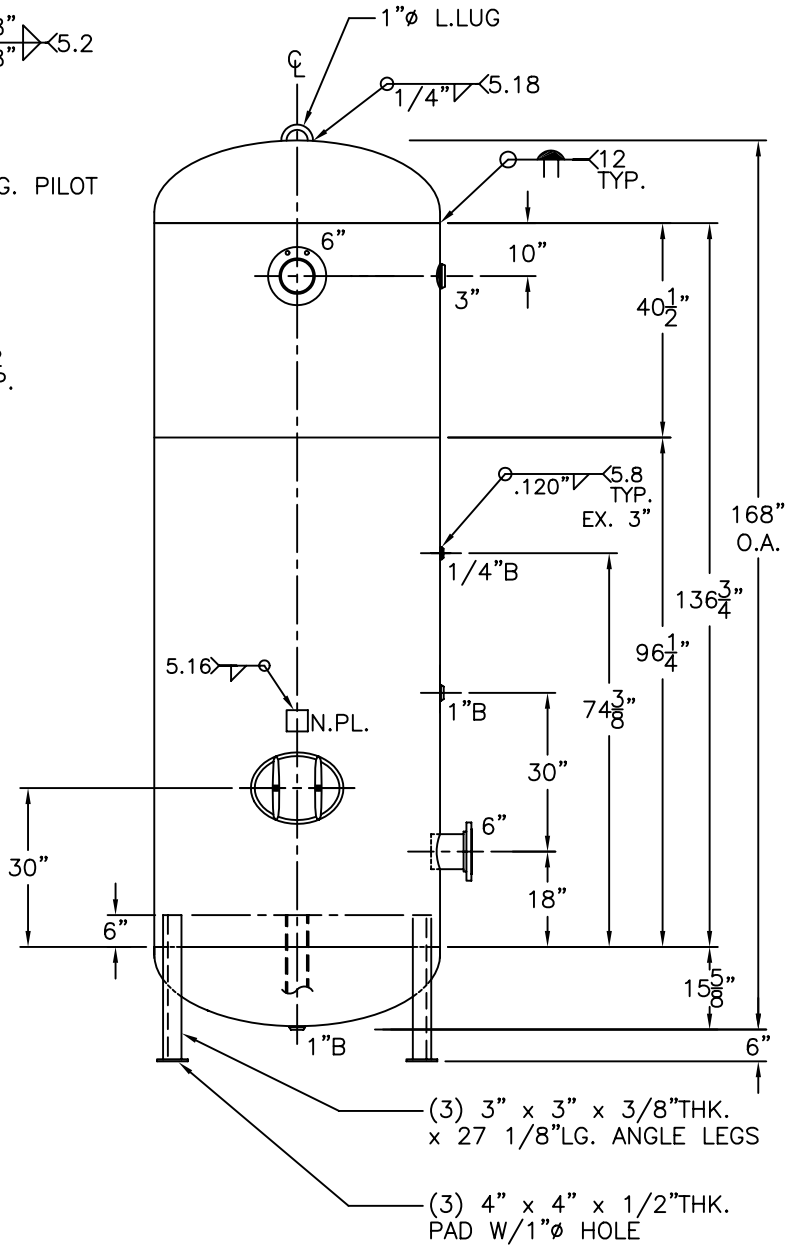

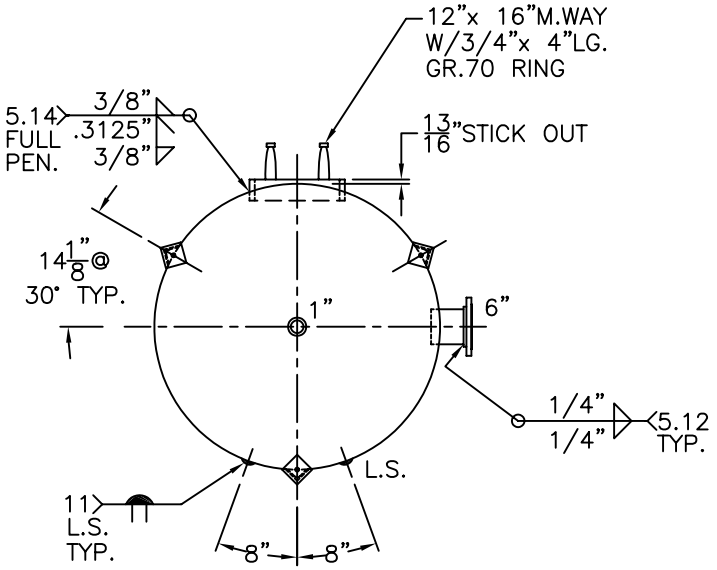

NOTE: 1) HYDRO @ 260 PSIG. MIN.

SHELL / HEADS	.3125" SA-455 2:1 S.E. (.294" MIN.)
	.3125" SA-455
M.A.W.P.	200 PSIG. @ 400 °F
M.D.M.T.	-20 °F @ 200 PSIG.
ASME. SECTION VIII	DIV. 1, 2001 ADD 2002
X-RAY:	RT-4 SPOT L.S. NOT G.S.
GALLONS: 1550	WT. 2964 LBS.
SERIAL NO.	
N.B.	

54-VA-1550-L	REV. 12-19-02
FOR: HANSON STANDARD	DATE: 12-8-79
VERT. AIR TANK	
INSIDE: UNPAINTED	
OUTSIDE: PRIME	
CAD "B" SIZE UNDER "STD"-SERIES	
BY: J.G.	SCALE:1/2"=12"

ROY E. HANSON JR. MFG.
1924 COMPTON AVE.
LOS ANGELES, CA 90011