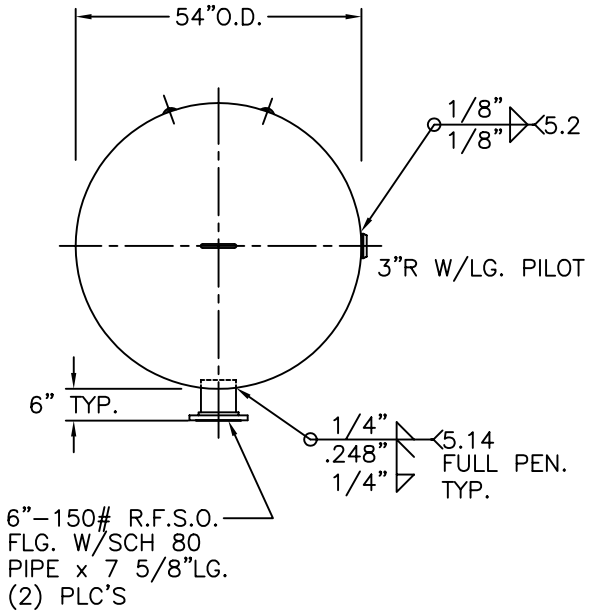

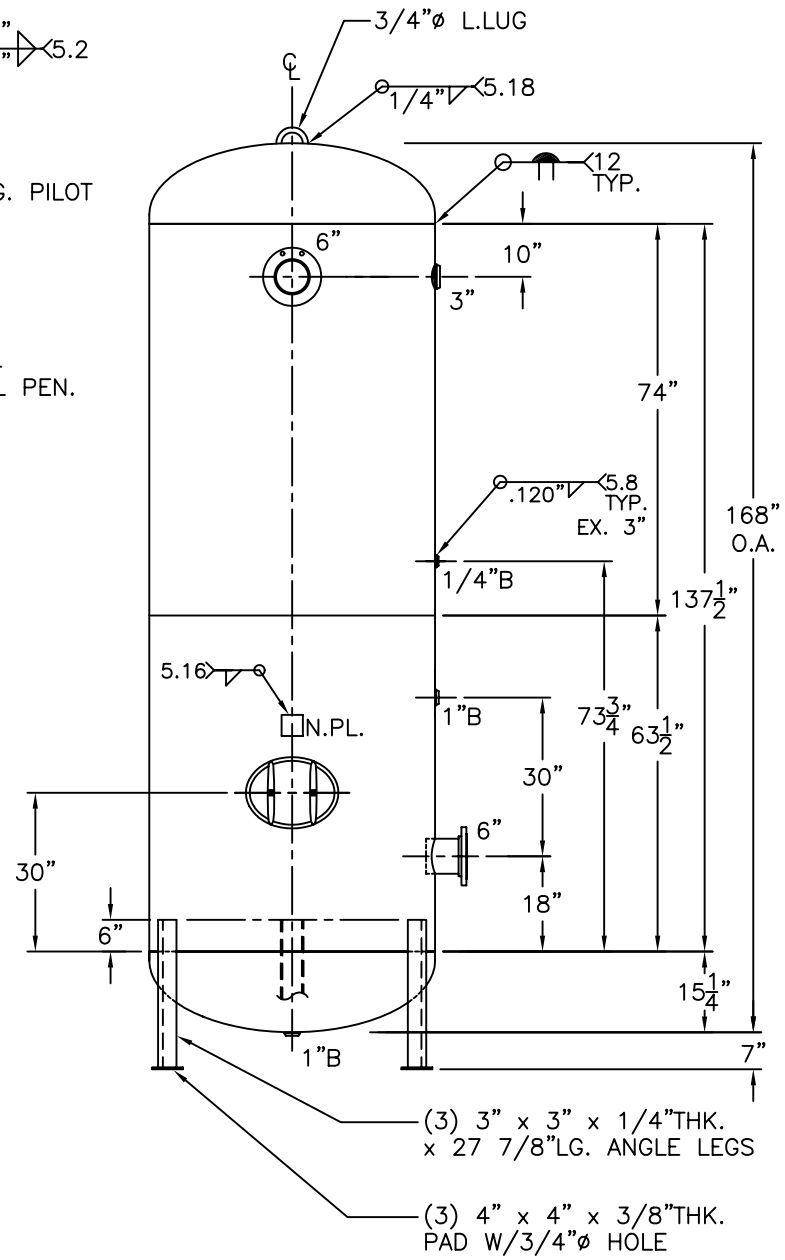

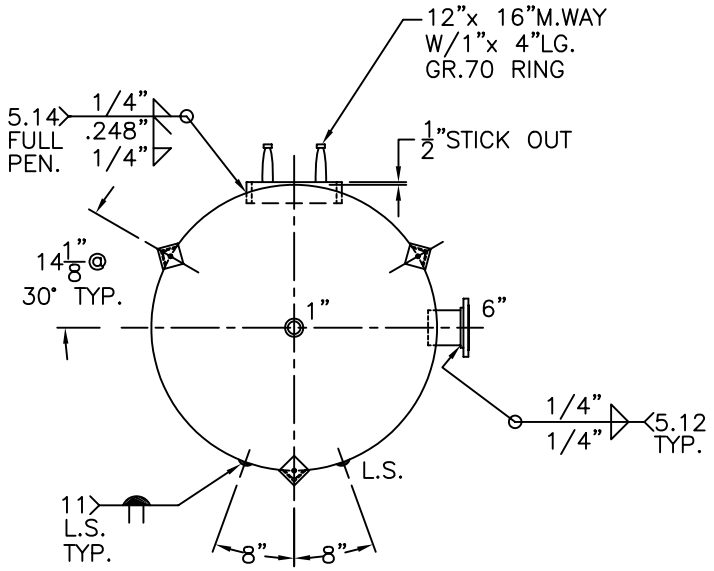

NOTE: 1) HYDRO @ 215 PSIG. MIN.

SHELL / HEADS	.250" SA-455 2:1 S.E. (.243" MIN.) JOGGLE
	.248" SA-455
M.A.W.P.	165 PSIG. @ 400 °F
M.D.M.T.	-20 °F @ 165 PSIG.
ASME. SECTION VIII	DIV. 1, 2001 ADD 2003
X-RAY:	RT-4 SPOT L.S. ONLY
GALLONS: 1550	WT. 2411 LBS.
SERIAL NO.	
N.B.	

54-VM-1550-L	REV. 1-21-04
FOR: HANSON STANDARD VERT. AIR TANK	DATE: 3-8-99
INSIDE: UNPAINTED	
OUTSIDE: PRIME	
CAD "B" SIZE UNDER "STD"-SERIES	
BY: J.G.	SCALE:1/2"=12"

ROY E. HANSON JR. MFG.
1924 COMPTON AVE.
LOS ANGELES, CA 90011