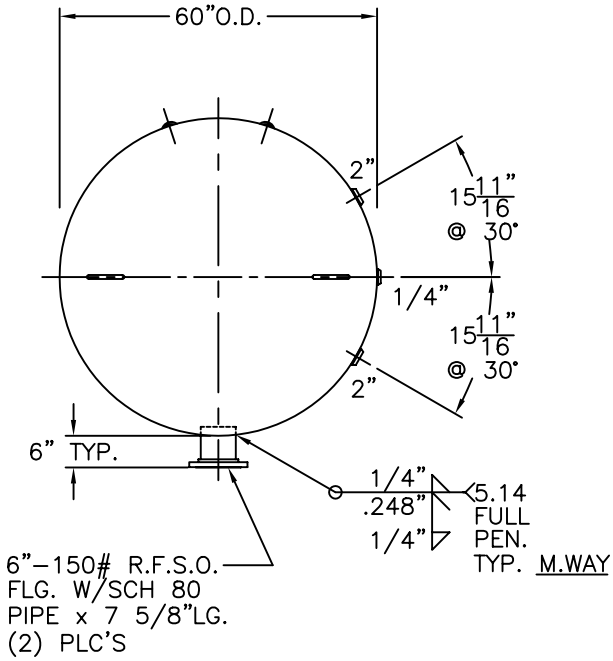

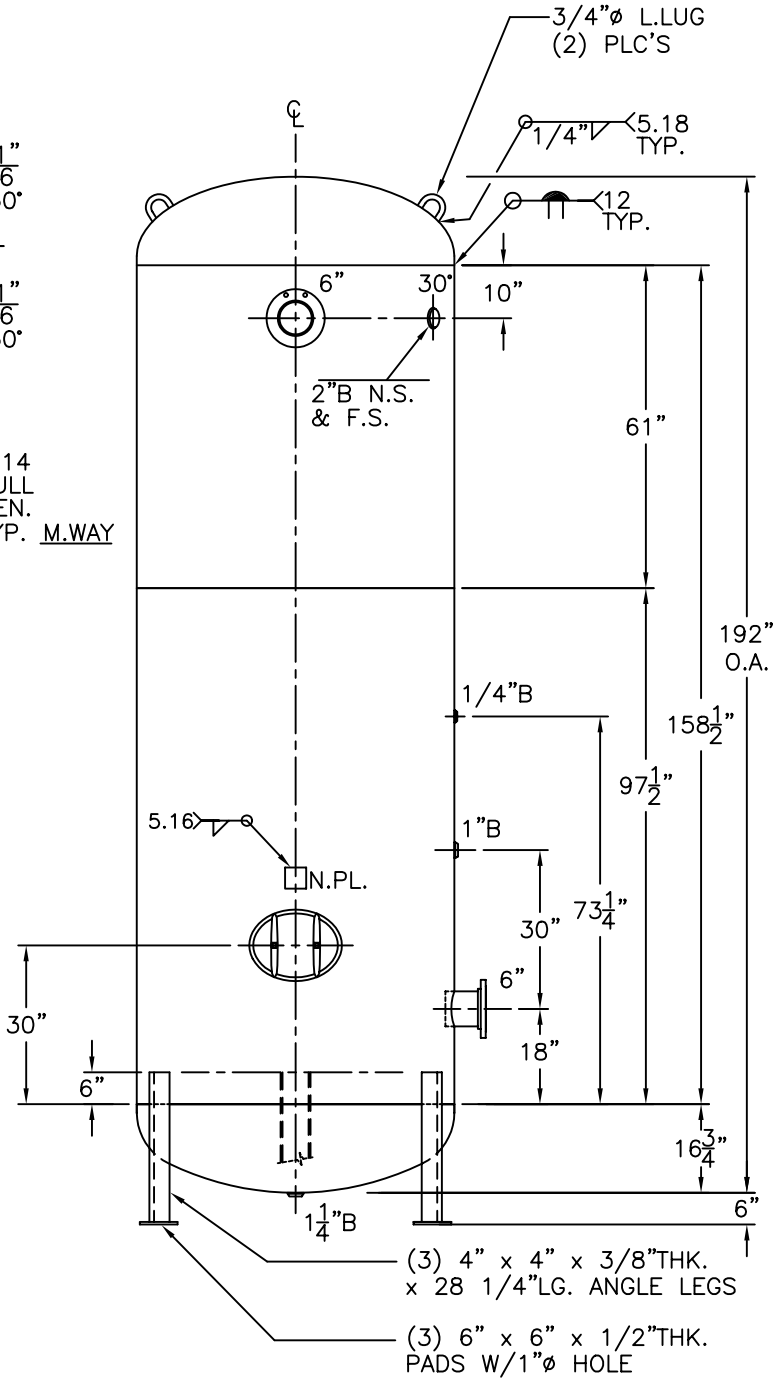

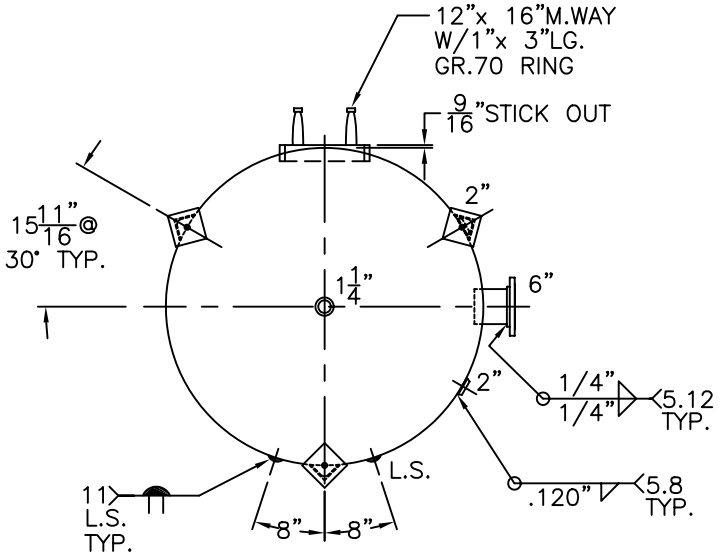

NOTE: 1) HYDRO @ 195 PSIG. MIN.

SHELL / HEADS	
	.288" SA-455 2:1 S.E.
	(.246"MIN.)
	.248" SA-455
M.A.W.P.	150 PSIG. @ 400 °F
M.D.M.T.	-20 °F @ 150 PSIG.
ASME. SECTION VIII	DIV. 1, 2001 ADD 2002
X-RAY: RT-4 SPOT L.S.	
GALLONS: 2180	WT. 3112 LBS.
SERIAL NO.	
N.B.	

60-VP-2180-L	REV. 12-6-02
FOR: HANSON STANDARD	DATE: 9-4-97
VERT. AIR TANK	
INSIDE: UNPAINTED	
OUTSIDE: PRIME	
CAD "B" SIZE UNDER "STD"-SERIES	
BY: J.G.	SCALE:1/2"=12"

ROY E. HANSON JR. MFG.
1924 COMPTON AVE.
LOS ANGELES, CA 90011