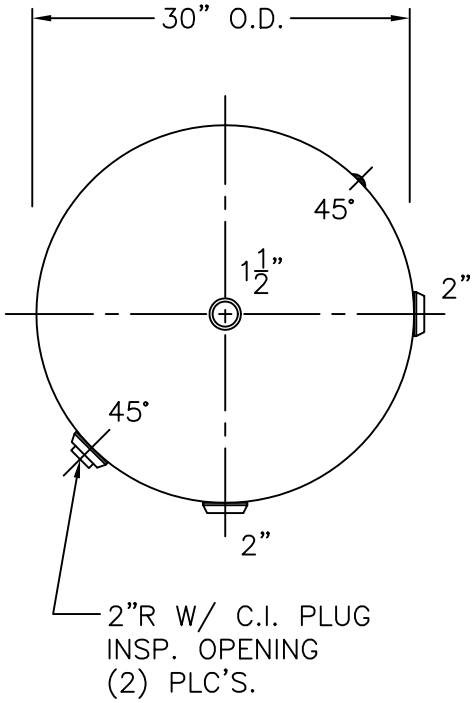

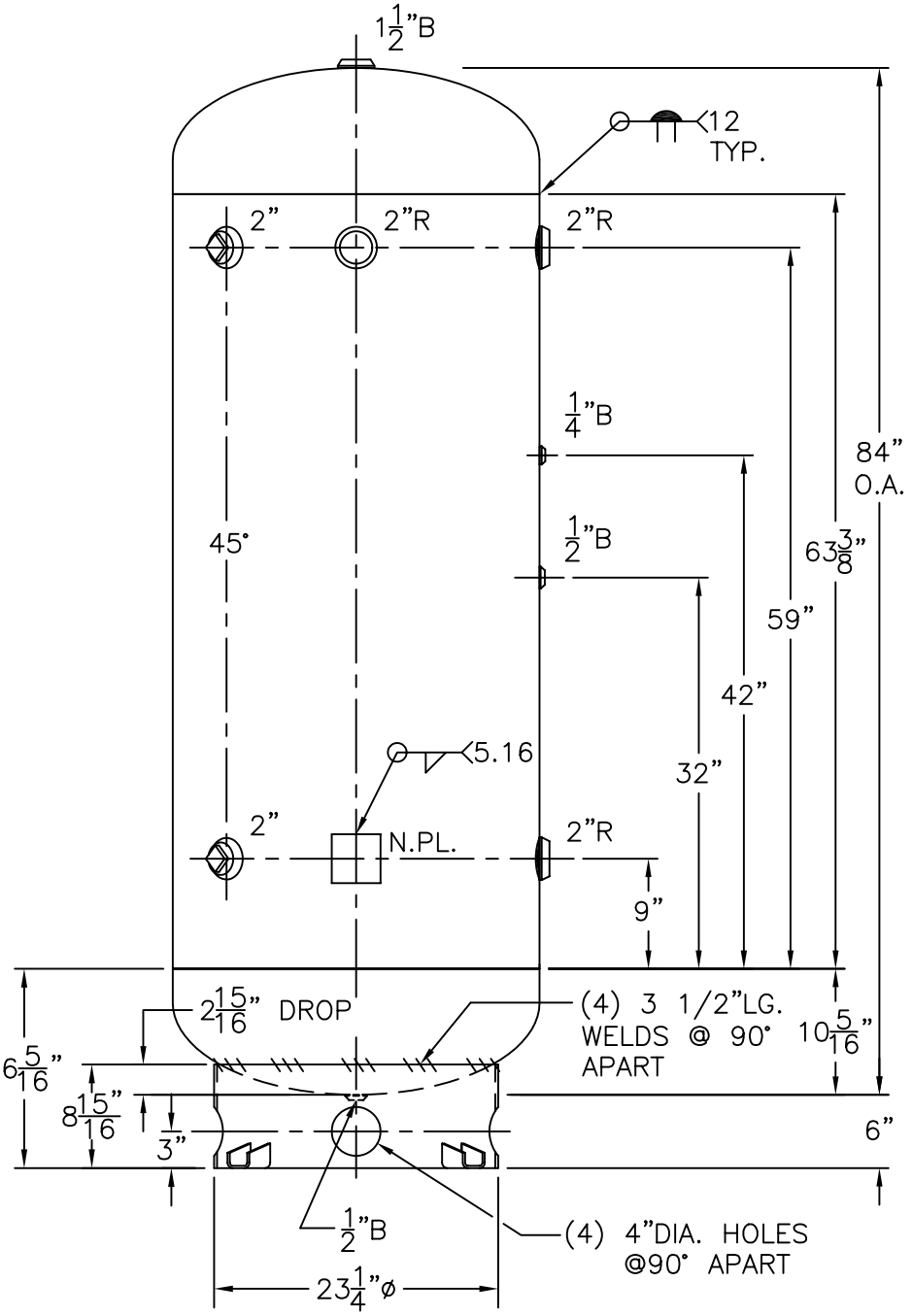

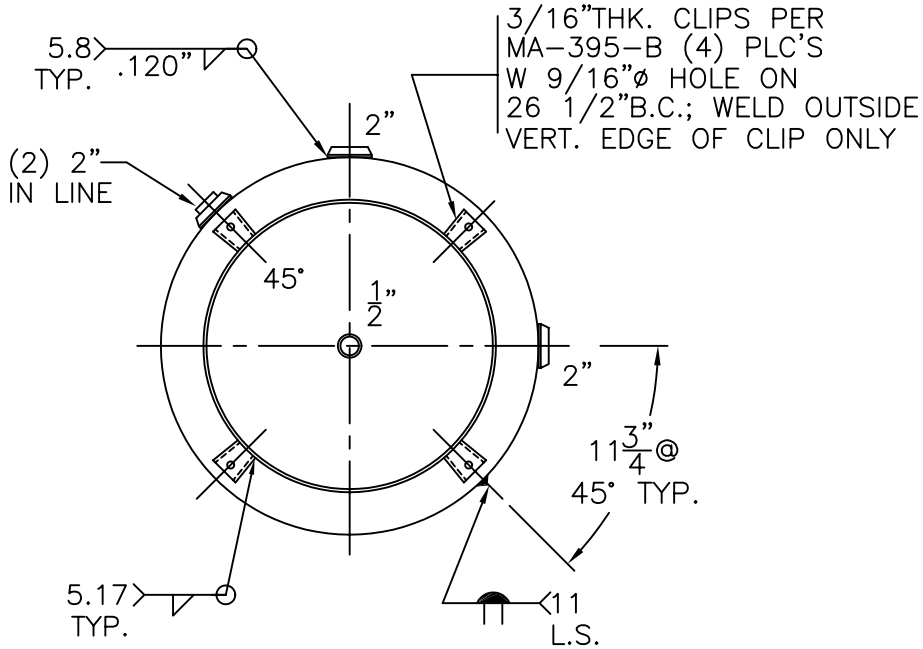

NOTE: 1) HYDRO @ 392 PSIG. MIN.

SHELL / HEADS	.218" SA-455 2:1 S.E.
	JOGGLE - .249 OFFSET
	.250" SA-455
M.A.W.P.	300 PSIG. @ 400 °F
M.D.M.T.	-20 °F @ 300 PSIG.
ASME. SECTION VIII	DIV. 1, 2004 ADD 2004
X-RAY:	RT-4 SPOT L.S. AND G.S.
GALLONS: 240	WT. 637 LBS.
SERIAL NO.	
N.B.	

30-VD-240-R	REV. 3-21-05
FOR: HANSON STANDARD	DATE: 12-2-86
VERT. AIR TANK	
INSIDE: UNPAINTED	
OUTSIDE: PRIME	
BY: J.G.	SCALE: 3/4"=12"

ROY E. HANSON JR. MFG.
1924 COMPTON AVE.
LOS ANGELES, CA 90011