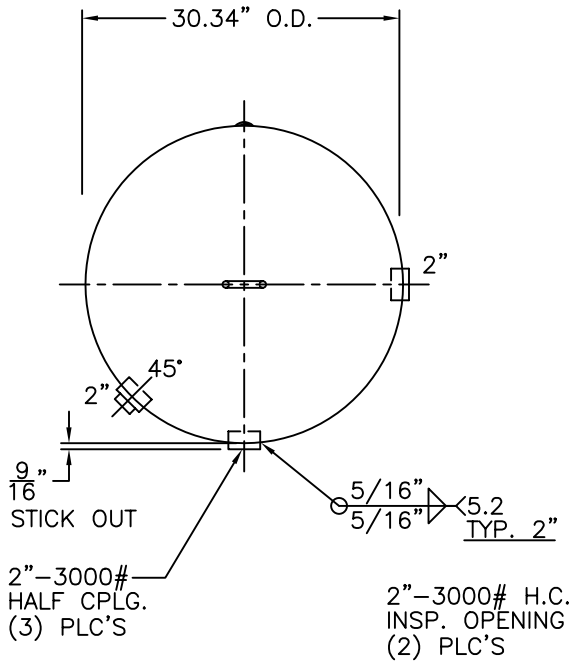

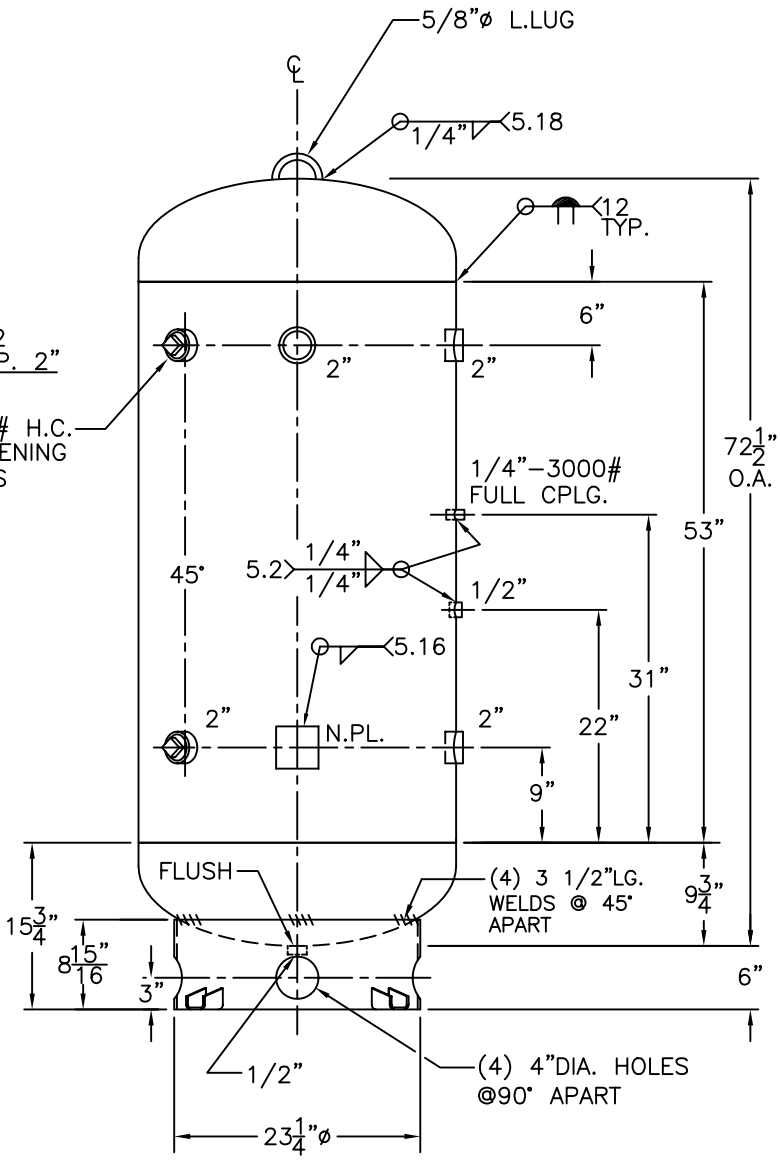

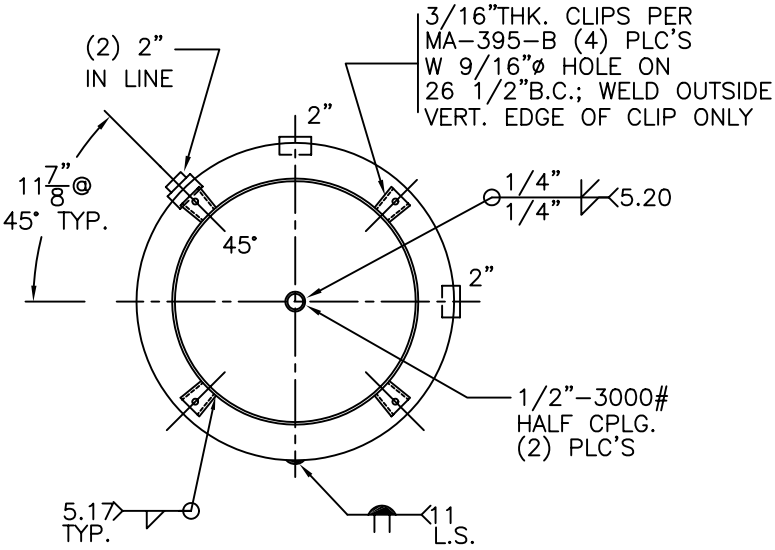

NOTE: 1) HYDRO @ 715 PSIG. MIN.
2) PRE HEAT BEFORE WELDING TO 150°F

SHELL / HEADS	
	.401" SA-455 2:1 S.E.
	(.390" MIN.) TRIM
	.500" SA-516-70
M.A.W.P.	550 PSIG. @ 400 °F
M.D.M.T.	-20 °F @ 550 PSIG.
ASME. SECTION VIII	DIV. 1, 2001 ADD 2002
X-RAY:	RT-4 SPOT L.S. & HDS. G.S.
GALLONS: 200	WT. 1031 LBS.
SERIAL NO.	
N.B.	

30-VK-200-R	REV. 12-23-02
FOR: HANSON STANDARD	DATE: 10-18-91
VERT. AIR TANK	
INSIDE: UNPAINTED	
OUTSIDE: PRIME	
CAD-"B" SIZE UNDER "STD"-SERIES	
BY: J.G.	SCALE: 1"=12"

ROY E. HANSON JR. MFG.
1924 COMPTON AVE.
LOS ANGELES, CA 90011