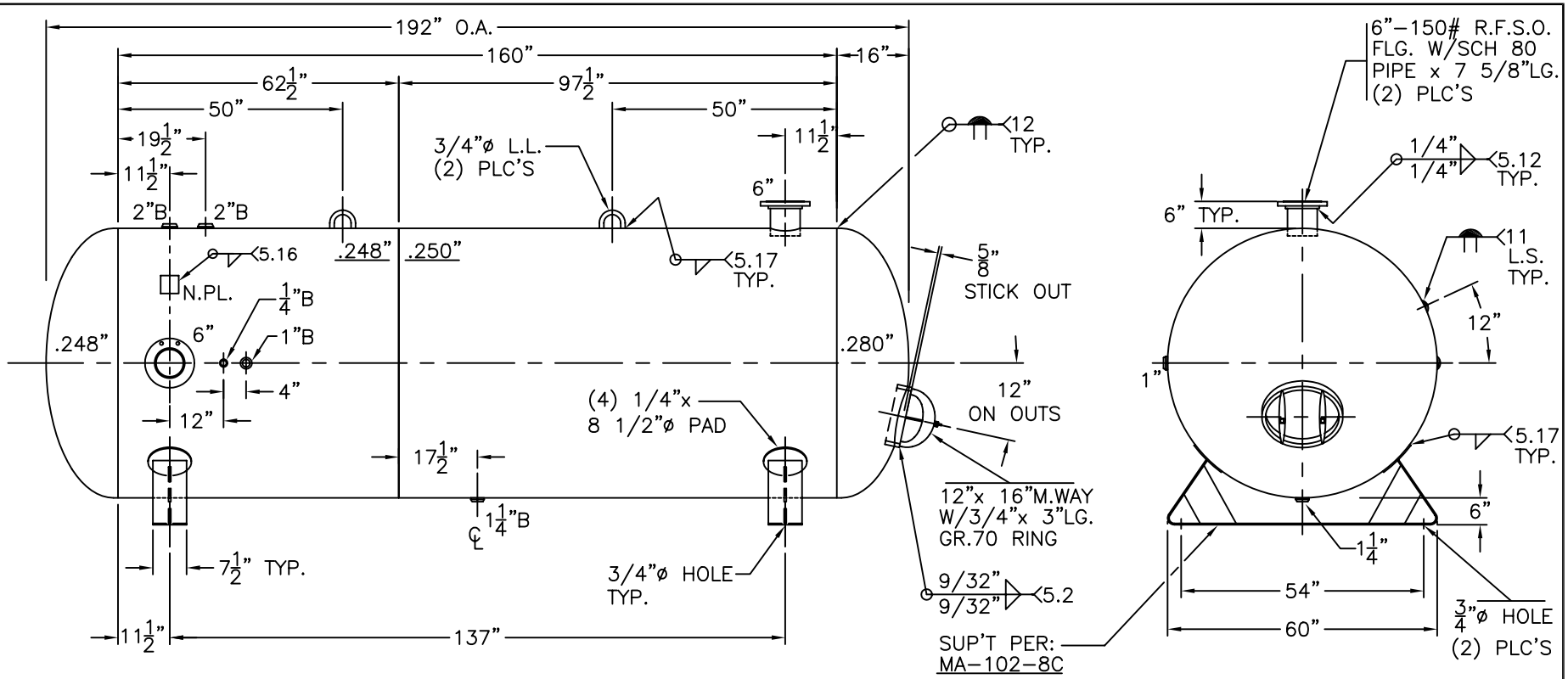

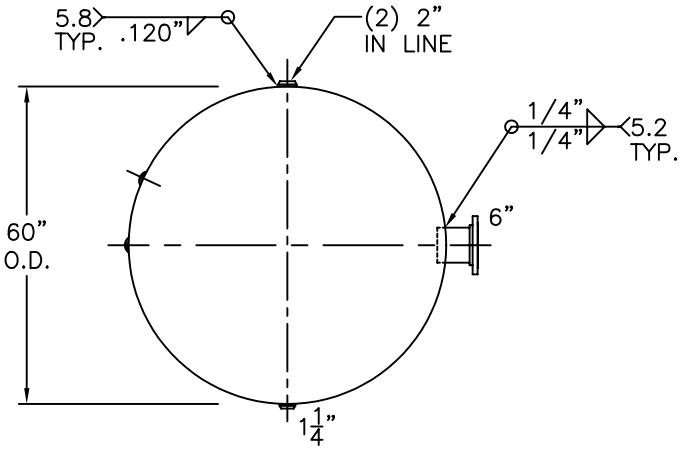

END VIEW W/OUT SUPT'S

NOTE: 1) HYDRO @ 179 PSIG. MIN.

SHELL / HEADS	LEFT – .248" SA-455 2:1 S.E. (.192"MIN.)	60-HQ-2180-W	REV. 11-27-02 DATE: 9-26-80
	RIGHT – .280" SA-455 2:1 S.E. (.237"MIN.)	FOR: HANSON STANDARD VERT. AIR TANK	
	.248" SA-455 – LEFT		
	.250" SA-455 – RIGHT		
		INSIDE: UNPAINTED	
M.A.W.P.	137 PSIG. @ 400 °F		
M.D.M.T.	-20 °F @ 137 PSIG.	OUTSIDE: PRIME	
ASME. SECTION VIII	DIV. 1, 2001 ADD 2002	CAD-"B" SIZE UNDER "STD"-SERIES	
X-RAY: RT-4 SPOT L.S. & LEFT G.S.		BY: J.G.	SCALE: 1/2"=12"
GALLONS: 2180	WT. 3124 LBS.	ROY E. HANSON JR. MFG.	
SERIAL NO.		1924 COMPTON AVE. LOS ANGELES, CA 90011	
N.B.			