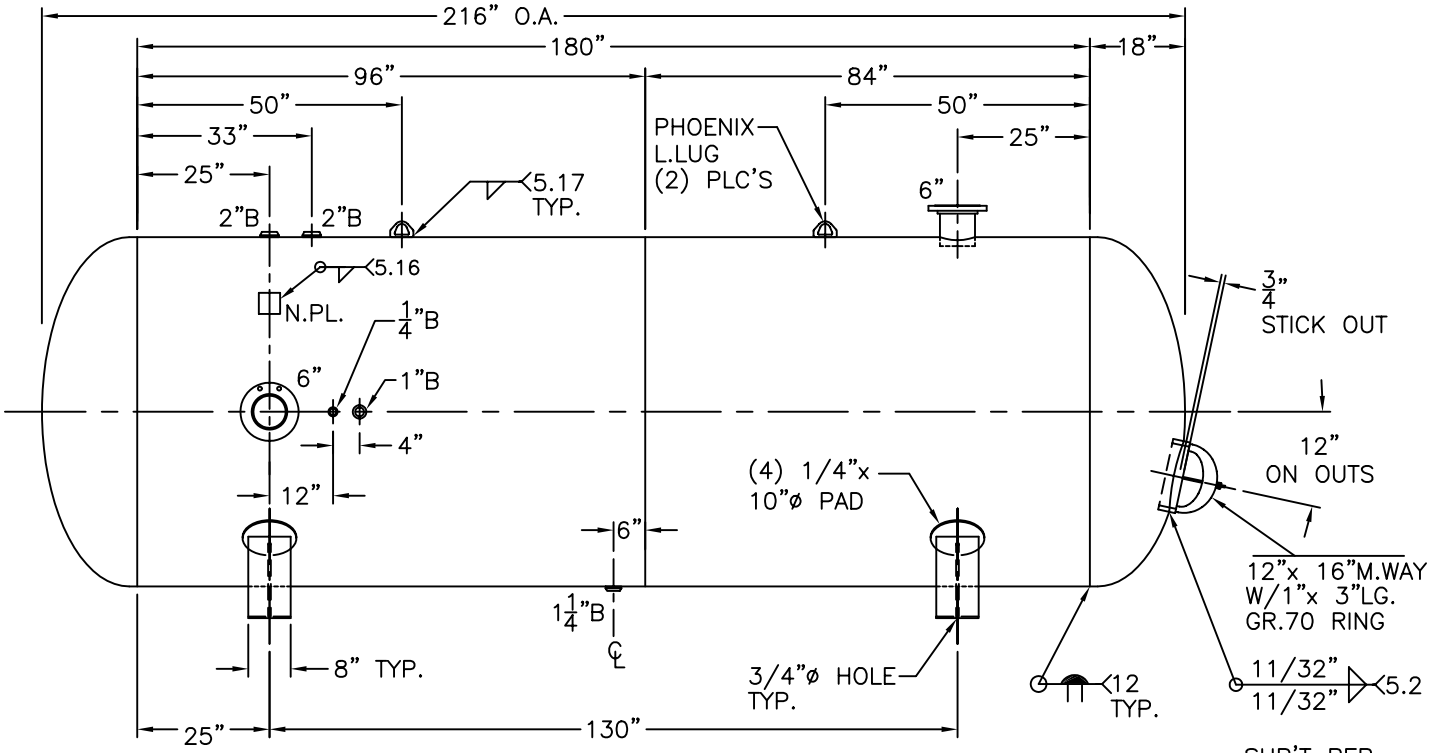

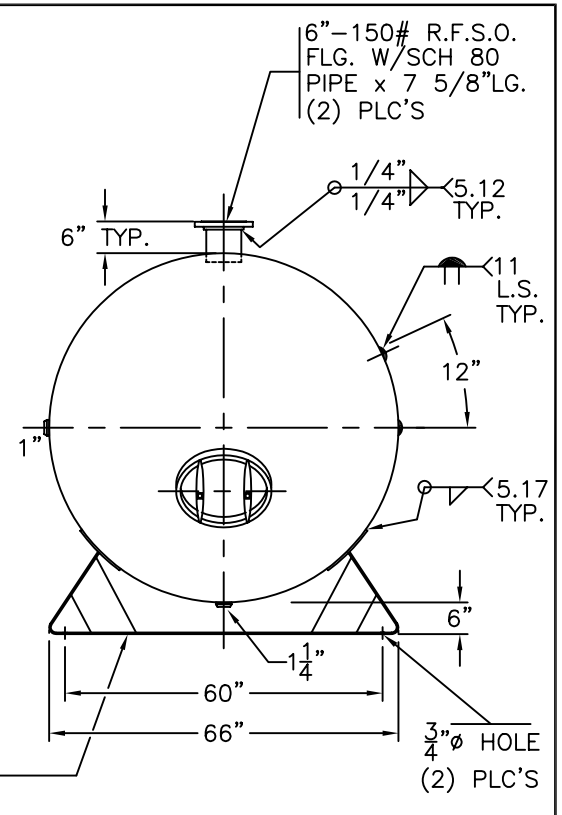

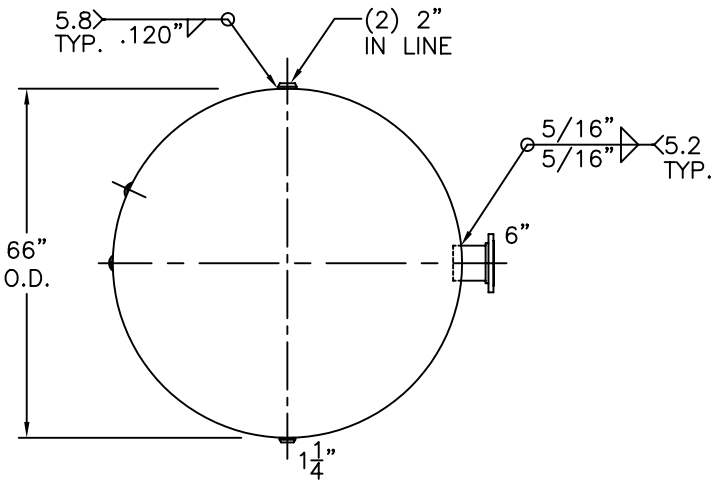

END VIEW W/OUT SUPT'S

NOTE: 1) HYDRO @ 215 PSIG. MIN.

SHELL / HEADS	.337" SA-455 2:1 S.E.	66-HM-3000-W
	(.253"MIN.) - LEFT	REV. 11-27-02
	(.282"MIN.) - RIGHT	DATE: 1-4-81
		FOR: HANSON STANDARD
		VERT. AIR TANK
	.3125"" SA-455	
		INSIDE: UNPAINTED
M.A.W.P.	165 PSIG. @ 400 °F	
M.D.M.T.	-20 °F @ 165 PSIG.	OUTSIDE: PRIME
ASME. SECTION VIII	DIV. 1, 2001 ADD 2002	CAD "B" SIZE UNDER "STD"-SERIES
X-RAY: RT-4 SPOT L.S. & HDS. G.S.		BY: J.G. SCALE:1/2"=12"
GALLONS: 3000	WT. 4808 LBS.	ROY E. HANSON JR. MFG.
SERIAL NO.		1924 COMPTON AVE.
N.B.		LOS ANGELES, CA 90011