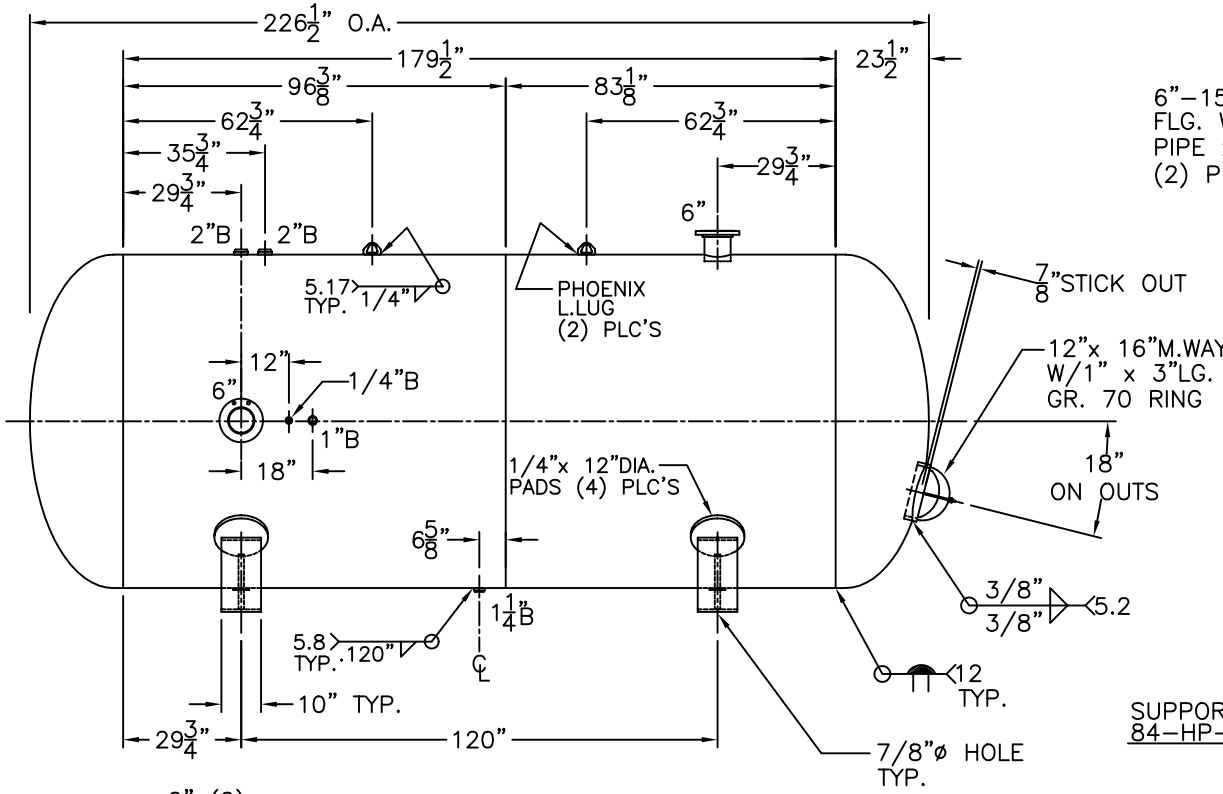

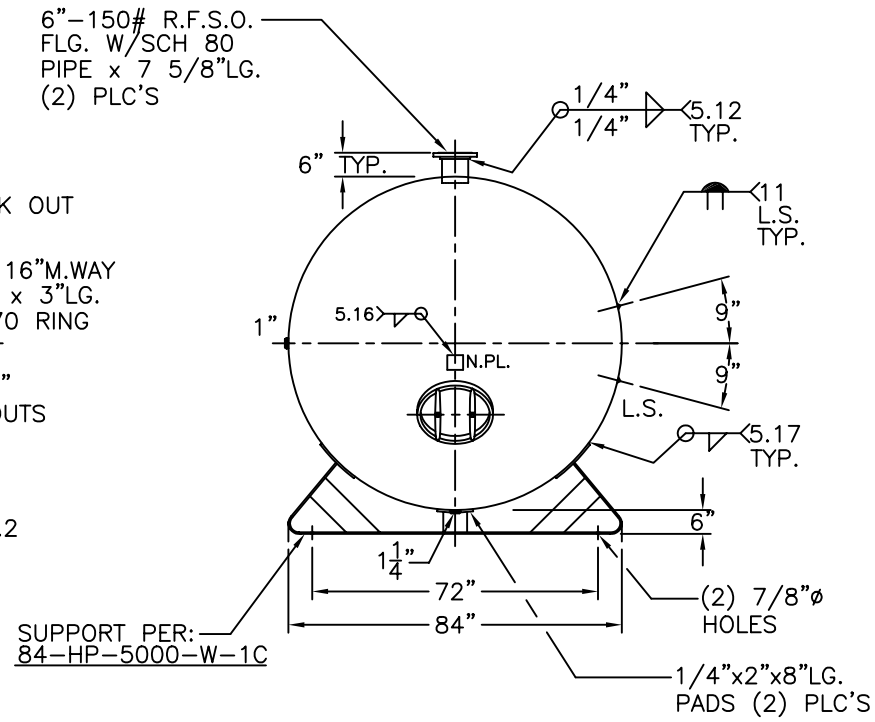

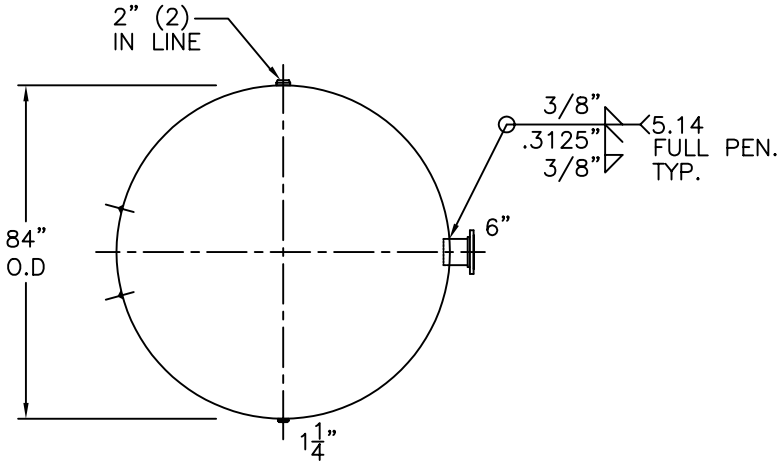

VIEW W/OUT SUPT'S

NOTE: 1) HYDRO @ 199 PSIG. MIN.

SHELL / HEADS	LEFT – .375" SA-455 2:1 S.E.	84-HP-5000-W	REV. 4-25-05
	(.300" MIN.)		DATE: 7/16/01
	RIGHT – .375" SA-455 2:1 S.E.	FOR: HANSON STANDARD	
	(.333" MIN.)	HORIZ. AIR TANK.	
	.3125" SA-455		
		INSIDE: UNPAINTED	
M.A.W.P. 150 PSIG. @ 400 °F			
M.D.M.T. –20 °F 150 PSIG		OUTSIDE: PRIME	
ASME. SECTION VIII DIV. 1, 2004 ADD 2004		CAD-"B" SIZE UNDER "STD"-SERIES	
X-RAY: RT-2 100% L.S. & SPOT ALL G.S.		BY: J.G.	SCALE: 3/8"=12"
GALLONS: 5000	WT. 7451 LBS.	ROY E. HANSON JR. MFG.	
SERIAL NO.		1924 COMPTON AVE. LOS ANGELES, CA 90011	
N.B.			